TOWN OF BOONSBORO

BOONSBORO *Maryland*

SPECIFICATIONS FOR SANITARY SEWER SYSTEM CONSTRUCTION

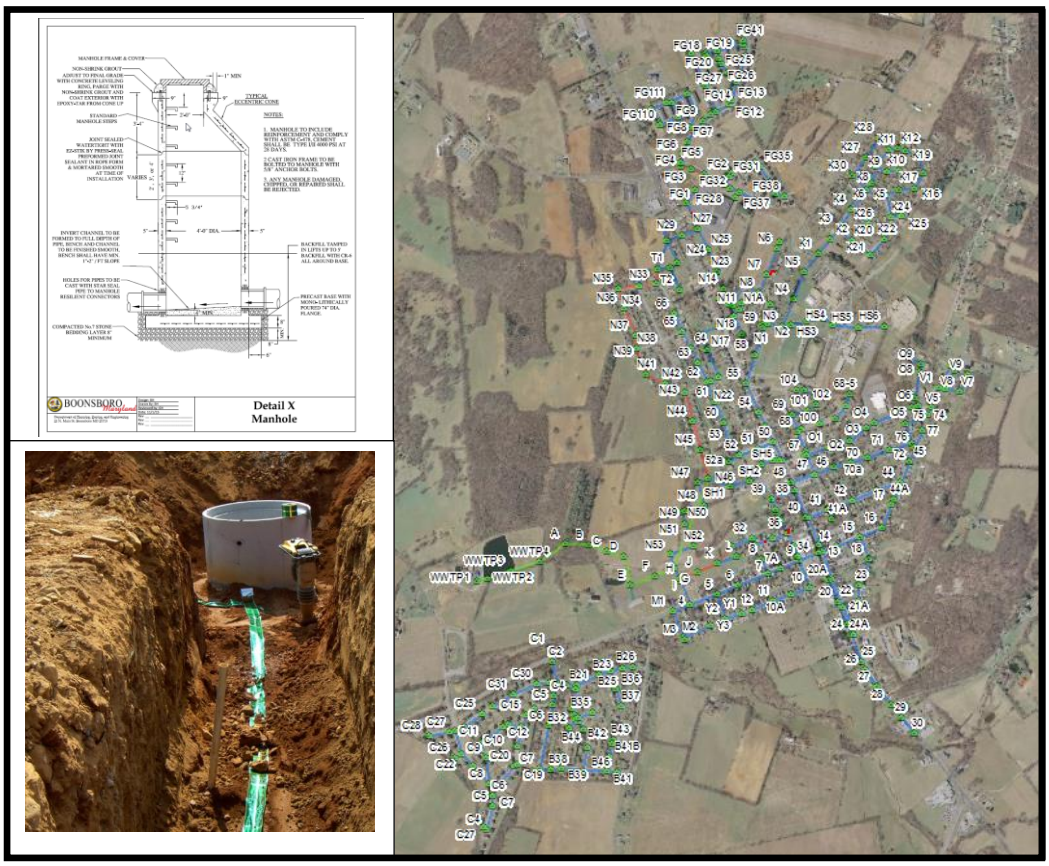

2019

This document shall be incorporated, by reference, into any development agreement, development plan, and/or development related documents to be recorded (i.e. plats, etc.). Any reference shall include the name of the developer and the Town of Boonsboro. These Specifications, as revised and updated from time to time, are binding on any property developer and require a property developer to be compliant with all contents herein, unless otherwise determined and specified, in writing, by the Town of Boonsboro. All reference of this document shall refer to it as the *"Town of Boonsboro Specifications for Sanitary Sewer Construction."* Recipients of this document must keep themselves informed of any revisions which may be made to the Specifications from time to time. Recipients of this document must keep themselves informed of any revisions which may be made to the Specifications.

TABLE OF CONTENTS

1. GENERAL
1.1 Scope and Purpose…… 3
1.2 Limitations and Applicability…… 3
1.3 Responsibility of the Designer Regarding the Sewer System…… 4
1.4 Definitions…… 4
1.5 Abbreviations…… 8
1.6 General Requirements…… 9

2. DESIGN
2.1 General…… 13
2.2 Pre-Design Meeting…… 14
2.3 Engineer's Report for Wastewater Systems…… 14
2.4 Comprehensive Wastewater Studies…… 15
2.5 Flow Requirements…… 16

3. SANITARY SEWER LATERALS
3.1 General…… 17
3.2 Design…… 17
3.3 Materials and Equipment…… 17
3.4 Installation…… 19
3.5 Testing and Inspection…… 21

4. GRAVITY SEWERS
4.1 General…… 22
4.2 Design…… 22
4.3 Materials and Equipment…… 24
4.4 Installation…… 26
4.5 Testing and Inspection…… 28

5. MANHOLES
5.1 Design…… 32
5.2 Materials and Equipment…… 32
5.3 Construction and Installation…… 35
5.4 Testing and Inspection…… 37

6. FORCEMAINS
6.1 General…… 38
6.2 Design…… 38
6.3 Materials and Equipment…… 38
6.4 Installation…… 42
6.5 Testing and Inspection…… 45

7. LOW-PRESSURE SEWERS
7.1 General…… 48
7.2 Design…… 48
7.3 Materials and Equipment…… 49
7.4 Installation…… 53
7.5 Testing and Inspection…… 54

8. PUMPING STATIONS
9.1. General…… 55
9.2. Design…… 56
9.3. Materials and Equipment…… 61
9.4. Suction Lift Type Stations…… 65
9.5. Dry Well / Wet Well Submersible Type Stations…… 70
9.6. Electrical Requirements…… 73
9.7. Start-up…… 79
9.8. Field Tests…… 80

APPENDIX A – APPLICATION FOR WATER SERVICE…… 81
APPENDIX B – SANIRATY SEWER CONNECTION PERMIT…… 82
APPENDIX C – UTILITIES PERMIT TEMPLATE W/ FEE SCHEDULE… 83
APPENDIX A - DETAIL DRAWINGS…… 84

SECTION 1 - GENERAL

1.1 Scope and Purpose

The scope and purpose of this Standards and Specifications document is to provide minimum requirements for the design, materials used, and methods of construction for the sanitary systems located within the rights-of-way and easements of the Towns' jurisdiction. The sanitary sewer system includes the sewer pipe mains, service connections, pump stations and manholes. These Standards also cover all other necessary appurtenances and, in general, any repairs, replacements, relocations, or any other work on public water and/or sanitary sewer systems.

Specific requirements have been emphasized to answer frequently encountered operations of developers, owners, and engineers. The scope of these standards and specifications is limited to the administration, design, construction, inspection, and testing of any facilities which upon their connection, will ultimately become part of the existing Town of Boonsboro Wastewater System.

1.2 Limitations and Applicability

The Sanitary Sewer Standards and Specifications are intended to provide a summary of information, procedures, criteria and practices, which are applicable to the undertaking of public water and sanitary sewer projects within the Commissions' jurisdiction. The procedural aspects presented represent current Utilities Commission practices, which to some degree may be considered fluid as these standards are in continuous evolution, subject to both administrative and legislative action at federal, state, and local governmental levels. The design criteria and engineering practices set forth in this manual shall be considered firm requirements for the development of water and sanitary sewer projects.

The engineering requirements included in this manual are intended to assist land developers and engineers with designing and building public water and sanitary sewer facilities within the Town of Boonsboro. Developer projects and capital projects, sponsored by private Developers shall conform to the procedures, requirements and criteria set forth in this manuscript. The manual is not intended to restrict the Designer's opportunity to create innovative, practical and economical designs for water and sanitary sewer system improvements as long as all regulations are met. Rather, it is intended to assist the Designer in completing the projects efficiently and economically within the framework of design parameters established herein as long as all applicable regulations are met.

It is not possible to include in this manual all features of design and drafting, which are necessary to accomplish the development of construction documents for all projects. The topics addressed are limited to those that will help the Designer perform most engineering tasks in an efficient manner and comply with Department practice. Although it is the Designer's responsibility to exercise professional judgment in the acceptance or use of the standards or features of design included herein, the Designer shall recognize that they are given to assist in the development of the project in the manner preferred by the Town. Deviations from the design standards must be brought to the attention of the Town. Waivers of the design manual must be justified to the Town, in writing, from an engineering evaluation, which includes consideration of life cycle costs and maintenance requirements. Approval or denial of the waiver requests will be by return letter signed by the Towns' Utilities Commission.

1.3 Responsibility of the Designer regarding the Sewer System

This chapter addresses the selection and use of design criteria and practices applicable to the design of waste water system projects in the Departments jurisdiction. The subject matter discussed includes the layout of piping systems, selection and employment of pipeline materials and the use of appurtenances. While the requirements described for the various aspects of design will include and cover the majority of conditions encountered, there is no intention to relieve the Designer of responsibility to recognize when conditions are not favorable for the application of standards. The Designer must be continually alert to conditions that cannot be satisfied by the application of these standard criteria. In the preparation of the design documents, the Designer shall take into account such matters as environmental impact, maintenance of pedestrian and vehicular traffic, maintenance of existing and proposed utility services, constructability, system maintenance and shall produce the overall most cost-effective design.

1.4 Definitions

The following definitions are applicable throughout these standards and specifications:

Acceptance - The formal action by the Department accepting the dedication of completed facilities.

Aeration - A process of intimate contact between air and a liquid by mechanical means or natural occurrence.

Air Release Valve (ARV) - A valve that enables air to be removed from a pressure main.

Allocation - The allowable quantity of sewage, water, and sanitary sewer to be discharged into the sanitary sewer system by any person, firm corporation, or legal entity as determined by the approving authority or in accordance with applicable federal, state, county, or city statutes, ordinances or regulations, the more stringent of which shall govern and control. This can be thought of as the assignment of system capacity to a property based on water consumption and available system capacity and expressed in average gallons per day.

Applicant - An individual owner or owner's developer, builder, engineer, or other authorized representative who applies as the owner's official agent to the Department for water or sanitary sewer service.

Approved - Unless specifically otherwise indicated, this shall mean approval by the Town of Boonsboro's authorized representative.

As-Built Drawings - Final engineering drawings of pipelines, appurtenances, pump stations, etc., which have been updated to accurately reflect the final physical state after construction is completed with accurate field surveyed post construction dimensions and attributes.. Also known as "Record Drawings".

Average Day Demand - The volume of water used in the year divided by 365 days, expressed in gallons or million gallons.

Average Day Rate - The water used during the Average Day Demand expressed in gallons per day (gpd) or million gallons per day (mgd) or divided by 1,440 minutes and expressed in gallons per minute (gpm).

Backfill - Soil or aggregate materials used to fill an excavated trench or other excavation.

Backflow Preventer - A device utilized to protect water supplies from contamination or pollution from the flow of potentially contaminated water back into the supply lines.

Bedding Course - Layer placed over the excavated subgrade in a trench before laying pipe. This is typically graded aggregate base (GAB) or crusher run (CR-6) material.

Building Drain - That part of the lowest horizontal piping of a drainage system which receives the discharge from waste pipes inside the walls of the building and conveys it to the building sewer, beginning 1.5 meters (five feet) outside the thinner face of the building wall. The building drain is owned and maintained by the property owner.

Building Sewer - The sewer from the building drain to the service connection. The building sewer, up to and including the clean out, is owned and maintained by the property owner.

Chlorination - The application of chlorine to water for disinfection.

Cleanout - A minimum 6" diameter stand pipe with a brass cap, used as a point of access to a sanitary sewer collection system for insertion of tools, rods, or snakes to effect lateral cleaning.

Collector - Generally a sanitary sewer pipeline used to collect and carry sanitary sewer from individual sources to an interceptor sewer that will carry it to a treatment facility. A sanitary sewer facility that is designed to carry smaller flows from service connections (Typically 8" to 10" diameter pipes).

Collection System - All facilities and processes for collecting and transporting sanitary sewer, including, but not limited to; collectors, interceptors, force mains, manholes, pump stations, and also includes all materials, equipment, and vehicles for proper operation and maintenance.

Combination Air Release Valve (CARV) - A combination air and vacuum valve that enables air to be removed from a pressurized pipe or force main.

Commercial Establishment - Any structure or any portion thereof intended to be used wholly or in part for the purpose of carrying on a trade, business or profession or for social, amusement, religious, educational, charitable or public use and which contains plumbing for kitchen, toilet, testing, washing facilities, etc.

Commission – The Boonsboro Utilities Commission.

Consulting Engineer - That person or persons, firm, partnership, or corporation legally authorized to practice civil engineering in the State of Maryland who, acting as an agent for a client or developer, prepares or submits improvement plans and/or specifications to the Department for approval. Called a Design Engineer in these Standards.

Contract - The agreement covering the performance of the work and the furnishing of labor, materials, tools, and equipment in the construction of the work. The contract may be in the form of the notice to contractors, proposal, plans, specifications, special provisions, contract or performance bonds, purchase orders, standard terms of conditions, work order forms, or a written agreement.

Contractor - The person or persons, firm, partnership, corporation, or combination thereof, private or municipal, that entered into a contract with the Department, or the owner of private property doing his/her own Work on his/her private property only. For purposes of acceptance and guarantee, Contractor refers to the party that has posted the bonds. For purposes of construction, Contractor refers to any contractor licensed by the State of Maryland to enter into contracts for and to perform the work of installing, repairing, replacing, or relocating water or sanitary sewer facilities under Department jurisdiction.

Customer - An owner, developer, builder, engineer, or other authorized representative who accepts responsibility for the customer facilities once they are constructed and accepted by the Department.

Department - The Town of Boonsboro Utilities Department, Water and Sanitary Sewer Divisions.

Developer - Any person, or persons, firm, partnership, corporation, or combination thereof, which is financially

Domestic Waste - Any solid, liquid, or gaseous substance containing only human wastes and/or household wastes discharged, permitted to flow or escaping from any residential, industrial, manufacturing, commercial, institutional or business establishment.

Double Wye Connection - A connection whereby two building sewers are connected to the same service lateral.

Duplex - Two residential living units in one building constructed up and down, side by side or front and rear. (AKA – double house)

Easement - A recorded document by which the land owner gives the Department or the public permanent rights to construct, operate, and maintain a pipeline across private or other property.

Engineer - The Town Engineer of Boonsboro or authorized representative doing consulting engineering work for the Town of Boonsboro.

Exfiltration - Liquid wastes and liquid carried wastes which unintentionally leaks out of a sanitary sewer pipe system and into the environment.

Floatation - The process of buoyancy affecting a structure below grade.

Force Main - The pressurized conveyance pipeline that carries sanitary sewer from a pump station into a gravity flow system.

Foundation Stone - Clean well-graded stone, authorized by the Department, used to strengthen and/or provide support to an otherwise weak subgrade. Foundation stone is placed, and the subgrade improved before bedding stone is placed.

Freeboard - The vertical distance between the maximum liquid level and the top of the sides of a conduit, reservoir, or tank.

Gravity Pipeline - The conveyance pipeline that carries sanitary sewer using natural gravity flow.

Grease - The residues of fats, detergents, waxes, free fatty acids, calcium and magnesium soaps, mineral oils, and certain other non-fatty materials which tend to separate from water and coagulate as floatables or scums.

HDPE - High Density Polyethylene

Improvement Plans - Drawings of all potable water, sanitary sewer mains, services, and appurtenances which are included under Department jurisdiction for the proposed project. Prior to construction, the authorized representative must approve Improvement Plans.

Infiltration - The water entering a sanitary sewer system, including service connections, from the ground, through such means as, but not limited to, defective pipes, pipe joints, connections or manhole walls.

Infiltration Rate - The rate at which soil will accept water. Commonly known as the percolation rate or acceptance rate of water flow into the existing or proposed sanitary sewer collection system.

Inflow - Storm water directly entering sanitary sewer collection systems through the openings of manholes, through defects in the pipes, or through street connections or gutter downspouts connected to the system.

Inspector - An employee or agent of the Department engaged to observe and record field compliance with design criteria, plans, and construction standards.

Interceptor - Generally a sanitary sewer pipeline designed to carry higher flows and intended primarily to transport sanitary sewer from one location to another, typically from collector to truck pipelines.

Lateral - Sanitary sewer: A sanitary sewer pipe that discharges into a sanitary sewer main and has no other common sanitary sewer tributary to it, it collects sanitary sewer from individual homes or other structures and carries it to the nearest collector sanitary sewer pipe or manhole. Water: That portion of the street service connection running from the main across the street to supply water to more than one individual building.

Pump Station - A pumping facility that pumps sanitary sewer through a short length of force main into the nearest manhole, such that sanitary sewer can again flow by gravity.

Low Pressure Sanitary Sewer (LPSS) - An alternative system to the conventional gravity sanitary sewer system, used for the collection and disposal of sanitary sewer by use of small diameter pressure piping, grinder pumps and other appurtenances such as air/vacuum release valves, flushing connection units, etc.

Main - All sanitary sewer pipelines dedicated for public use in the Department's system, excluding services and laterals. Also known as "Main Lines, or Pipelines". For sanitary sewer, the principal public sanitary sewer pipeline to which branch sanitary sewer pipes and sub mains are tributary.

Marking Tape - Warning tape buried above a pipeline or attached directly to a pipe for the purpose of identifying the pipe. Also known as "Warning Tape".

Manhole - A structure (appurtenance) in a sanitary sewer collection system with the purpose of permitting workers or equipment to enter or leave the system.

Manhole Inserts - Basin type device placed in the top of a manhole to prevent surface and storm waters from entering into the sanitary sewer system.

May - Is permissive.

Owner - The legal holder of property, material. etc. Any holder of legal title, contract purchaser or lessee of property for which service is requested from the Department. The record owner of real property, residence, or business.

Pipe Casing - A pipe that encases a water or sanitary sewer pipe, used to separate the water or sanitary sewer pipe from undesirable conditions or to enable construction using a trenchless method.

Plumbing Code - The plumbing code as utilized by Washington County and the Town of Boonsboro. International Plumbing Code 2015 by International Code Council, or latest adopted edition.

Pretreatment - Any process whereby undesirable constituents in the water, waste, sanitary sewer, including but not limited to soluble organics, toxic materials, heavy metal ions, color and turbidity, nutrients, refractory materials, oils, grease and immiscible liquids, acids and alkalis, organic and inorganic solids, excessive temperatures, pathogenic wastes and radioactive isotopes, are reduced to levels deemed acceptable by the Department before these sanitary sewers are admitted to the sanitary sewer collection system.

Pump Station - Typically, a pumping facility that pumps sanitary sewer longer in order to convey it into a gravity system. Alternatively, a point where sanitary sewer is lifted to a higher elevation when the continuance of the sanitary sewer pipeline at reasonable slopes would involve excessive depths of trench, or that raises sanitary sewer from areas too low to drain into available collection pipelines.

Record Drawings - The final, post-construction drawings that accurately represent the final condition of the project. Also Known as As-Built drawings.

Runoff - Flow of water along the surface of the ground or other natural or manmade surfaces including, but not limited to, pedestrian walkways, streets, playground surfaces, and grassy slopes or other landscaped areas.

Scum - The layer or film of foreign matter that rises to the surface of water or sanitary sewer and is formed there. A residue deposited on top of the ledge of a sanitary sewer, channel, or wet well at the water surface. A mass, of solid matter that floats on the surface.

Sedimentation - The process of settling and depositing suspended matter carried by sanitary sewer, by gravity. Sedimentation usually occurs when the velocity of the sanitary sewer is reduced below the point at which it can transport the suspended material.

Select Backfill - Material used in the backfilling of an excavation, selected for desirable compaction or other characteristics. CR-6, Graded aggregate base, etc. All aggregates should be 6" or smaller.

Service Connection - (Sanitary sewer) That portion of the sanitary sewer pipeline (lateral) between the sanitary sewer main and the curb line, existing or proposed, to which the building sewer is connected.

Service Line - The pipe and fittings between the sanitary sewer main and cleanout.

Sewage - Any combination of the water carried domestic and/or industrial wastes from various customers including residences, business buildings, institutions, or industrial establishments, together with such groundwater, surface water and storm water as may be present. Also known as sanitary sewer.

Sewage Solids - The non-liquid portion of sanitary sewage consisting of such things as feces, other organic matter, trash, grit, etc.

Sewer - An older term for sanitary sewer.

Sewerage - A comprehensive term which includes facilities for collecting, intercepting, pumping, transporting, treating, and disposing of sewage.

Shall - Is mandatory.

State - The State of Maryland.

Structures - Buildings, footings, foundations, retaining walls, slabs, tanks, curbs, mechanical and electrical appurtenances, or other man-made stationary features constructed above or below the ground surface.

Subcontractor - An individual, firm, or corporation having a direct contract with the Contractor or with any other subcontractor for the performance of a part of the Work at the site.

Subgrade - Surface or elevation remaining after completing the trench excavation or, the top surface of a backfill (stone or soil) immediately below the pipe conduit or pipe bedding, as applicable.

Town - Town of Boonsboro, Maryland.

Transition Manhole - The manhole that a force main ties into and where the gravity sanitary sewer system begins.

Trench Rock Excavation - Removal and satisfactory disposal of all unsuitable materials, which, in the opinion of the authorized representative, cannot be excavated except by drilling, wedging, jack hammering, blasting, or hoe ramming. It shall consist of undecomposed stone, hard enough to ring under hammer. All boulders containing a volume of more than ½ cubic yard and/or solid ledges, bedded deposits, unstratisfied masses and conglomerations of material so firmly cemented as to possess the characteristics of solid rock which cannot be removed without systematic drilling, blasting, or hoe ramming will be classified as rock.

Trunk - A sanitary sewer main pipeline that serves many tributary branches and serves a large territory. Under normal conditions this pipeline carries high flow rates.

Unauthorized Discharge - Any release of waste waters that violates the regulations of the Department or any applicable Federal, State, or local statutes, regulations, ordinances, and contracts.

Warning Tape - Tape that is laid a specified distance above a buried pipe, typically one (1) foot for water mains and (2) foot for sanitary sewer mains, for the purpose of warning that there is a buried pipeline below.

Sanitary sewer - The used water and water-carried solids from a community that flow into a treatment plant. Storm water, surface water, and ground water filtration also must be included in the sanitary sewer that enters a plant. The term "SEWAGE" usually refers to household wastes, but this word is being replaced by the term "SANITARY SEWER".

Watercourse - A channel in which a flow of water occurs, either continuously or intermittently.

Work - Any and all obligations, duties, and responsibilities necessary to the successful completion of the project assigned to or undertaken by a Contractor including all labor, materials, equipment, and other incidentals, and the furnishing thereof.

1.5 Abbreviations

Whenever in these Standards the following abbreviations are used, they shall be defined as listed below:

AASHTO - American Association of State Highway and Transportation Officials
ANSI - American National Standards Institute
ASTM - American Society for Testing and Materials
ANSI - American National Standards Institute
ASTM - American Society for Testing and Materials
CARV - Combined Air and Vacuum Release Valve
CF - Cubic Feet
CFR - Code of Federal Regulations
CIP - Cast In Place
CL - Center Line
C/O - Clean out
Deg - Degree
Dia - Diameter
DIP - Ductile Iron Pipe
DIPRA - Ductile Iron Pipe Research Association
DR - Dimension Ratio
DWF - Dry Weather Flow
EDU - Equivalent Single Family Dwellings
EP - Edge of Pavement
FL - Flow Line
FM - Force Main
FPS - Feet per second
gpm - Gallons per Minute
gpcd - Gallons per capita per day
gpd - Gallons per Day
HDPE - High Density Polyethylene
hp - Horse Power
ID - Inside Diameter
I/I - Inflow and Infiltration
KW - Kilowatts
lb - Pound
LF - Linear Foot
LPI - Lightning Protection Institute
LWL - Low Water Level
MDE – Maryland Department of the Environment
MDSHA – Maryland State Highway Department
MDOT - Maryland Department of Transportation
MGD - Million Gallons per Day
MH - Manhole
NEC - National Electric Code
NEMA - National Electrical Manufacturers' Association
NPCA – National Precast Concrete Association
NPSHA - Net Positive Suction Head Available
NPSHR - Net Positive Suction Head Required
NSF - National Sanitation Foundation
OD - Outside Diameter
OSHA - Occupational Safety and Health Administration
R/W - Right of Way
PACP - Pipeline Assessment and Certification Program
PPI - Plastic Pipe Institute
PSI - pounds per square inch
PVC - Polyvinyl Chloride
PF - Peaking Factor
PLC - Programmable Logic Controller
PVC - Polyvinyl Chloride
PWWF - Peak Wet Weather Flow
SCADA - Supervisory Control and Data Acquisition
SDR - Standard Dimension Ratio
SF - Square Foot
TDH - Total Dynamic Head
UL - Underwriters Laboratory Inc.
WEF - Water Environment Federation

1.6 General Requirements

1.6.1. APPLICANT/OWNER.

All references to the "Applicant or Owner" in these specifications pertain to the individual, organization, company or developer who makes application to construct or install sewer lines, sewer systems and sewer services in the Town's sanitary sewer service areas.

1.6.2. TOWN'S RIGHT OF INSPECTION.

A. The Town shall have the right to inspect any sewer system construction being carried out by the Applicant, including the right to inspect the preparation, fabrication and manufacture of the materials to be used. The inspector shall have the authority to reject materials or suspend the work until any questions or issues can be referred to and decided by the Town.

B. The Inspector is not authorized to revoke, alter or waive any requirements of the Contract. The inspector shall in no case act as foreman or perform other duties for the Contractor nor interfere with the management of the work by the latter. Any advice which the Inspector may give the Contractor shall not be construed as binding the Town in any way or releasing the Contractor from fulfilling all the terms of the Contract.

C. Where there is disagreement between the Contractor (or his representative) and the Inspector, the Inspector will immediately direct the Town's attention to the issues of disagreement and if the Contractor still refuses to make corrections, comply or suspend work, the Town will prepare and deliver to the Contractor a written order suspending the work and explaining the reason for such suspension. As soon as the Inspector is advised of the delivery of the suspension order, the Inspector shall immediately leave the site of the work and any work performed during the Inspector's absence will not be accepted or paid for.

D. Should the inspected work prove to be unsatisfactory, the cost of removing and replacing, renewing and making good the unsatisfactory work shall be borne by the Applicant. No sewer service facility shall be placed in service until it has been successfully tested in the presence of an authorized Town representative.

1.6.3. WORKING CONDITIONS.

No night, Saturday, Sunday or National Holiday work subject to Town inspection will be permitted except in cases of emergency with written Town consent or if it is specifically outlined in the Contract. No work shall be done when, in the opinion of the Town, the weather is unsuitable.

1.6.4. STANDARD SPECIFICATIONS.

Standard specifications of societies, associations, institutes, etc., referred to in these Specifications, shall be the latest edition of such specifications unless otherwise noted.

1.6.5. WORK AREA TRAFFIC CONTROL AND MAINTENANCE.

A. Traffic in work areas shall be controlled to protect the public and workmen, while minimizing the inconvenience to the public. Traffic control devices shall conform to the Maryland State Highway Administration (MD SHA) Temporary Traffic Control Typical Application, Standards MD 104.00 through 104.06. Traffic control measures shall be coordinated with the Town of Boonsboro.

B. Unless authorized by the Town to completely close the road, the contractor must take the necessary measures to keep the road open for traffic, at his own expense. When vehicles must be stopped for short periods, work shall be performed during other than peak traffic periods. During progress of work, sidewalks and crossings must be kept open for pedestrians, unless otherwise authorized. Access to residential and business establishments shall be maintained, except when work is actually being performed in the area.

C. All sidewalks, roadways and private property shall be kept clear of excessive dust, dirt, mud or other excavated material. The Town shall be empowered to require the cleaning and/or dampening of any area, if in his judgment such action is necessary for the safety and accommodation of traffic and the public. Trenches across driveways, side streets, alleys and entrances shall be maintained after backfilling.

1.6.6. MARYLAND TITLE 12: UNDERGROUND FACILITIES

Excavation or Demolition near Underground Facilities. Maryland Title 12, Subtitle 1 sets forth requirements designed to protect underground utility lines from damage during excavation. Generally, it requires that the location and type of utility lines at the work site be ascertained and detailed information from each user (utility owner or operator) be requested at least 48 hours before beginning work, excluding weekends and legal holidays. In Maryland, the organization to contact is MISS UTILITY. The telephone number is 1-800-257-7777.

1.6.7. PERMITS.

A. The Applicant shall secure, in the name of the Town, all permits that are required from the Maryland Department of the Environment (MDE), Maryland State Highway Administration, and Washington County. The Applicant shall secure, in his own name, all required construction permits such as local street opening permits. Any existing street, highway or other improvements disturbed during construction shall be restored to the satisfaction of the Town before the facilities will be accepted for final acceptance by the Town. All costs of such permits, including any and all bonds required, shall be the sole expense of the Applicant.

B. The Applicant shall acquire all necessary permits for blasting and for special equipment. Any provisions in these permits shall supersede the above provisions.

C. Approval by the Town inspector of all or part of any work performed under permit issued by an independent agency, shall not constitute acknowledgement that the work was performed in accordance with such permit; nor shall such approval by the inspector be construed as a release of the applicant from his obligations to meet the requirements of the permit, or that such approval be a waiver of the Town's right to seek enforcement from the permitting agency.

1.6.8. SPECIAL REQUIREMENTS.

A. All sewer lines shall be extended to the furthest property lines or corners of the development under consideration. The exception shall be where lines cannot be further extended at the sole discretion of the Town.

B. The size and location of the sewer mains, pumping stations, treatment facilities, valves and other appurtenances shall be determined or approved by the Town's authorized representative so as to comply with the Town's long-range facilities planning.

C. All sewer mains to be dedicated to the Town shall have a 30' right-of-way, pipelines shall be centered in the ROW.

D. Gas utility mains shall be shown on water and sewer plan and profile sheets during the design phase of the project for Town approval prior to construction.

E. Construction of sewers and appurtenances shall conform to the requirements of the Occupational Safety and Health Act (OSHA).

F. All equipment used on roadways shall be equipped with rubber tires or treads. If other than rubber tires or treads are used, the pavement shall be protected by heavy rubber belting. If pavement, curb and/or sidewalk is damaged or marked by construction equipment, the areas shall be restored at no cost to the Town.

G. Backfill material shall not be removed from the lines of work before the excavation is refilled, except with Town approval.

H. All work shall be protected from damage during storms.

I. For all contractors working on the Town system, A competent person shall be identified and made available within 2 hours in case emergency situations arise during non-working hours.

J. The local Police and Fire Departments shall be informed of the work schedule and of possible street obstructions.

K. Blasting for excavation shall be permitted only after securing approval(s) and establishing the hours of blasting. The blasting procedure, including protection of persons and property, shall be in strict accordance with federal, state and local regulations.

L. Basements. The Town will not be responsible for any damage that may result from basements being flooded by a blockage in the service line. Basement floor drains and sump pumps that collect groundwater or surface water shall not be connected to the sewer system.

M No hotel, restaurant, boarding house, or public eating place shall connect to the sewer system without first installing grease traps or grease interceptor, of a type and size approved by the Town or its representative and a flow monitoring manhole, in the service line at locations approved by the Town or its representative.

N. No service station, garage, factory building, or commercial establishment which handles oils, petroleum or similar products, or which washes cars, trucks, or other types of machinery, shall connect to the sewer system without first installing grease and sand traps of sizes and types approved by the Town or its representative, and a flow monitoring manhole, in the service line or at a location approved by the Town or its representative. Waste from commercial/industrial users requires pretreatment prior to discharge to the collection system and a pretreatment application must be completed. Restaurants, bakeries, and other facilities involved in the preparation of food have the potential to discharge oil and grease to the sanitary wastewater system. It is the discharger's responsibility to install and properly maintain such a pretreatment system to ensure that oil and grease are not discharged to the wastewater system in accordance with the Town Code. Oil/water separators, where required, shall be shown on the plans and shall comply with the requirements of the Plumbing Code.

O. All materials used for the public sanitary sewer system shall be domestically produced.

P. All material shall be new stock, produced within the previous 365 calendar days and the contractor shall have an invoice showing such.

Q. Submittals – submittals shall be provided for all materials to be used for the public sanitary sewer system and approved by the Town for use.

R. For any water main not following a roadway, and all weather access lane must be provided and at a minimum shall include compacted base, geotextile, and 4” of crusher run stone.

S. Any Contractor that will perform wastewater system work must have an applicable contractor's license.

Wastewater pump stations shall be used only when it has been determined to be the only practical way to provide sanitary service and upon approval of the Town. Pump Stations shall be located at the optimum site to ensure gravity service to as much of the drainage area as possible.

SECTION 2 – DESIGN CRITERIA

2.1 General

The sizing of major components of the Town wastewater collection and conveyance system such as major pumping stations, force mains and interceptor wastewater mains are generally the responsibility of the Design Engineer and the Town. The Master Plan shows the major existing and planned wastewater collection and conveyance system components. The Designer shall be familiar with and design in accordance with the approved Master Plan. The wastewater design criteria presented herein shall apply to both Developer and Capital Projects.

The hydraulic design of wastewater collection systems shall be in accordance with Gravity Sanitary Wastewater Design and Construction, Second Edition (ASCE Manuals and Reports on Engineering Practice No. 60 / WEF Manual of Practice No. FD-5), or latest edition thereof, and the additional guidelines and criteria in this document as well as applicable ASCE/WEF standards. All wastewater pipe, manholes, and other appurtenances shall be installed in accordance with the requirements of the Maryland Department of the Environment (MDE), these Construction Standards, and as recommended by the manufacturer. These Construction Standards and manufacturer's guidelines shall be present at the construction site at all times.

When hydraulic computations are required, the design professional shall first submit the design flows for the site to the Department. The Department will coordinate with the designer on the invert elevations of the nearest connection points to the existing wastewater collection system. The design professional will use this elevation to begin the hydraulic design of any collection main extensions and onsite service connections.

The following minimum requirements are considered acceptable to the Town of Boonsboro in the collection of wastewater from residential and nonresidential customers. Deviation from these may be allowed if in accordance with sound engineering standards, and if the deviation will not increase the likelihood of a system failure or impact the level of service provided to existing customers on the Town of Boonsboro collection system. When the Town of Boonsboro standards differ from state and/or federal regulations, the most stringent requirement shall apply.

All drawings, specifications, and engineer’s reports submitted for approval shall be prepared by or under the supervision of a licensed professional engineer legally qualified to practice in Maryland. The front cover of the engineer's report, each sheet of the drawing set, and each sheet of specifications submitted for review shall bear the signed imprint of the seal of the licensed professional engineer who prepared or supervised the preparation, and shall be signed with an original signature and date.

The engineer shall be responsible for obtaining the review and necessary approvals of all drawings and specifications by applicable Town, County, State and Federal agencies having jurisdiction. Copies of such approvals shall be submitted to the Boonsboro Utilities Commission at the time of final approval.

The developer is required to design and construct his/her system, properly sized and at an appropriate location, to permit future extensions to be made at the limits of the subdivision or development in question.

2.2 Pre-Design Meeting

Prior to commencing any work, the Designer is encouraged to schedule a pre-design meeting with the Department or other appropriate agency to discuss any topics, which are particularly important in the development of the Engineering Report and subsequent design of the project. Pertinent topics may include any of the following:

1. Preliminary or prior reports prepared by the Town/County, if applicable
2. Development of population projections and wastewater flows
3. Sizing of major system components
4. Applicable plumbing codes
5. Limit of project and future extension, if planned
6. Route selection and location of pipe in public right-of-way
7. Pipe materials and appurtenances
8. Design criteria to be used
9. Both design constraints due to and from anticipated interaction with existing utilities
10. Soil conditions that may affect infiltration and inflow in pipes and appurtenances
11. Bedding requirements
12. Special topographic conditions affecting design such as slopes, streams, floodplain and stream crossings
13. Special permitting issues created by the presence of wetlands, rare and endangered species, historical and/or archaeological artifacts
14. Easement requirements
15. Conditions affecting traffic maintenance and control

For Developer Projects which require minor extensions of the public wastewater systems, the pre-design meeting may take the form of a preliminary wastewater plan showing the general layout of the utilities in relation to the proposed development. The plan shall be accompanied by a letter report, which shall include general information about the project, design criteria used, alternatives investigated and the cost estimates for all alternatives. The plan shall be submitted after the concept plan for the development has been approved by the planning commission.

2.3 Engineer's Report for Wastewater Systems

Requests for extensions of wastewater mains should be accompanied by an engineer's report, which shall present the following information as applicable:

A. A description of the nature and extent of the area to be served. Wastewater pipelines are to be designed to serve the entire service area of which the subdivision or development is a part. Elevation of the wastewater system must be designed such that future extensions can serve the entire area that naturally drains toward the system.

B. An appraisal of the future requirements for service, including existing and potential connections, provisions for extending the system to include additional area. The engineer should take into consideration flow rates that may be derived for different zoning and land use classification that exists or could exist in the area of development.

C.. Average daily flow and peak hourly flow.

D. Design flow and capacity for each pipe segment.

The plans shall provide for future connections by extending mains to the exterior boundaries of the development. The collection system developed shall be compatible with the Town of Boonsboro Planning department's comprehensive plan.

2.4 Comprehensive Wastewater Studies

A Comprehensive Wastewater Study is a plan to provide wastewater service to a specific portion of the areas served by the department. A comprehensive wastewater study will fully describe the area to be served by the local collection and trunk facilities, and will fully describe the facilities necessary to provide service to that area. The approved wastewater study will become part of the organizational knowledge and historical documentation used by the Department for future planning.

A Wastewater Study shall be submitted and approved if the Department determines there is a possibility that any of the following exist.

- Upstream or adjacent areas might require wastewater service through the subject property.
- Downstream wastewater capacity is limited.
- It may not be possible to serve the project and / or surrounding area with gravity wastewater service.
- Interim wastewater facilities may be required.
- Off-site wastewater facilities (such as pump stations) may be required.

When a Wastewater Study is required, it shall be submitted and approved prior to submittal and approval of project improvement plans and prior to final approval of the subdivision/improvement plans.

A. General Requirements

In order to develop a Wastewater Study the minimum information that must be accumulated and presented includes an analysis of the regional setting, topographic information of the area to be served (delineated on the map and discussed), any specific projects that precipitated the study, relevant assumptions and special conditions, existing and proposed development, existing and proposed wastewater infrastructure, ultimate development within the study area, and hydraulic grade line at the point of discharge into major facilities.

B. Flows

The flows generated within each sub-service area of the sub-area plan will be calculated in accordance with the procedures contained in these standards unless otherwise specified by the Town's authorized representative.

C. Study Map

The method of providing wastewater service to the entire service area, including pipe sizes, lengths, slopes, and inverts, shall be shown to the extent necessary to determine the requirements within the subject property. All areas to be serviced through the project site, per the Town Comprehensive Plan, must be included in the project flows.

D. Study Slopes

The minimum slopes for gravity pipe shall be determined using the design parameters outlined herein (see size and slope following). If the proposed pipe alignment will be in an existing or planned road and the study identifies accurate locations for manholes, then the fixed minimum slopes may be used. If the proposed pipe alignment will be across undeveloped land and will be using nodes at a set spacing, then the minimum schematic slope shall be used.

Whenever alternative solutions involve different types of facilities such as a gravity system versus a pumped system, cost comparisons are more truly representative when analyzed to include capital, operation and maintenance costs on a life cycle basis, using reasonable interest rates. Current construction costs shall be adjusted and projected to the planned construction year as indicated in the project schedule with consideration of the effects of current inflation rates. The factors used in these projections shall be clearly stated.

2.5 Flow Requirements

A. Residential

- Residential uses includes; single family homes, duplexes, townhouses, or apartment/condominiums.

- Average daily flow shall be based on 200 gallons per day per unit.

B. Nonresidential

The proposed flow for commercial, industrial or other nonresidential uses shall be as determined by the engineer/owner per allocation criteria and reviewed and approved by the Town's authorized representative. In order to minimize under or over allocation the design engineer shall consult with the owner to arrive at an accurate estimate flow. The ideal proposed flow in the case of retail chains should be based on comparable data from other chain establishments of the same size and use. The minimum flow is 250 gallons/day.

For considering development of surrounding areas where land is zoned for industrial or commercial usage, and to insure adequate capacity upon development, design shall be based on an average daily flow of 2,000 gallons per day per acre or as indicated by the Town's authorized representative.

C. Peak flow - lateral and collector wastewater mains

For a Lateral (a wastewater pipeline that has no other common wastewater pipelines discharging into it.) or a collector (a wastewater main that receives flow from one or more laterals.) the minimum peak design flow should be 400 percent of the average design flow.

D. Peak flow - Trunk and interceptor wastewater mains

For a Trunk (a wastewater pipeline that receives flow from one or more sub-main wastewater pipelines.) and Interceptors (wastewater mains that receive wastewater flow from a number of gravity mains, trunk wastewater mains, force mains, etc.) the Minimum peak design flow should be 300 percent of the average design flow.

SECTION 3 - SANITARY SEWER LATERALS

3.1. General

A. A sanitary sewer lateral is that section of a sanitary sewer that extends from the main sewer to the property line, curb line or right-of-way line of the property which it serves.

B. All sanitary sewer laterals constructed within the service area of the Town of Boonsboro shall meet the requirements of this specification.

3.2. Design

A. Sewer laterals shall be installed with a minimum cover of 5 feet at any point along its entire length. Laterals shall be minimum 6-inch diameter and shall be made at the main line shall be made with a "WYE" fitting. Laterals shall be installed with a minimum 2% and maximum 7% slope to the edge of the right-of-way or a point two feet beyond the sidewalk or proposed sidewalk, or ten feet beyond the curb line or edge of street, whichever is greater, and shall include a removable watertight cap or stopper. The terminus shall be abutted with a post painted green extended above ground level. One fitting is permitted if needed to change the vertical alignment (45º max.). All lateral wyes shall be set in accordance with the detail drawings contained herein.

B. Fittings (wye branches, risers and bends) and sewer lateral pipe shall be furnished and installed in strict accordance with these specifications, and any and all practices and precautions required for the main gravity sewers specified in Section 5 of these specifications are equally applicable to the sewer laterals.

C. Laterals shall be installed at least 10 feet away from, measured horizontally, and 18 inches below, measured vertically, existing water mains. If these minimum distances cannot be achieved, alternative methods for protecting the water mains, as approved by the Town, shall be used.

D. Sewer laterals shall not be connected to manholes unless approved by the Town.

E. A cleanout shall be installed behind the curb (or at the property line if there is no curb) on each lateral and be flush with finished grade.

3.3. Materials and Equipment

(References to ASTM, AWWA and ANSI Specifications imply Latest Edition.)

3.3.1. Ductile Iron Pipe and Fittings.

A. Ductile Iron Pipe.

(1) Ductile iron pipe and conform to AWWA C151 and ASTM A746. Pipe shall be supplied in standard lengths as much as possible with laying lengths of either 18 ft or 20 ft nominal lengths. Pipe shall be manufactured by Griffin Pipe Products Co. or approved equal.

(2) Ductile iron pipe and fittings for use in gravity sewers, service lines, and force mains shall be lined with either Protecto 401 ceramic-filled amine cured epoxy or Series 431 Perma-Shield® PL ceramic epoxy, or approved equal. These linings shall be applied in accordance with the manufacturer's recommendations.

B. Joints.

Joints shall be rubber-gasket push-on type or rubber-gasket mechanical joint type conforming to AWWA C111. Gasket shall be of SBR. Ductile iron for use as restrained joint shall be mechanical joint pipe using Uni-Flange joint restraining glands.

C. Minimum Thickness.

Thickness design shall be per AWWA C150, Class 52.

3.3.2. Polyvinyl Chloride Pipe and Fittings.

A. Polyvinyl Chloride Pipe.

Polyvinyl chloride (PVC) sewer pipe and fittings shall be PVC SDR 26 with full diameter dimensions and shall conform to ASTM D3034 and UNI-Bell UNI-B4. Pipe shall be manufactured by North American Pipe Corporation or approved equal.

B. Joints.

PVC pipe and fittings shall have bell and spigot push-on joints. The bell shall consist of an integral wall section with a solid cross-section elastomeric gasket (as manufactured by North American Pipe Corporation or approved equal) securely locked in place to prevent displacement during assembly. Installation of elastomeric gasketed joints and performance of the joint shall conform to ASTM F477, ASTM D3139, ASTM D3212 or UNI-B-1. No solvent cement joints will be permitted in field construction, except as specifically authorized by the Town.

C. All fittings and accessories for sewers shall have bell and/or spigot configurations compatible with the pipe.

D. Certifications of compliance of the above specifications shall be required from the manufacturer before acceptance of delivery or award of contract.

3.3.3. Cleanouts.

A. The cast iron cleanout adapter shall have a heavy-duty design, suitable for use in light traffic areas. All castings shall be tough and of even-grain, free of gas holes and flaws. All parts of the castings shall be thoroughly coated at the factory with one coat of black asphaltum paint. The castings shall have a grooved retainer ring for installation of a single-piece gasket. The joint, properly fitted, shall produce a flexible and watertight connection.

B. The brass plug shall be cast of first line brass threaded to fit the cast adapter. The plug shall have a counter-sunk head. The cast iron cleanout adapter and brass plug shall be as manufactured by Jones Manufacturing Co. or approved equal.

C. A wye bend shall be provided at the base of the cleanout stack, the wye bend shall be encased in a premanufactured concrete block as produced by Prism Precrast Products or equal.

3.3.4. Wyes for Connection to Main Line.

Wyes shall conform to the pipe material specifications above.

3.3.5. Marking Tape.

Underground utility marking tape shall be 4” detectable as supplied by pro-line safety products. Thickness ASTM D2103 5.0 mil, Tensile Strength ASTM D882 4100 psi, Elongation ASTM D822-75b, Color: Green with black lettering, Labeled “Wastewater” or “Sewer Line”.

3.3.6. Sewer Saddles

Saddles shall only be used in special circumstances and with the permission of the Town. Saddles shall be in a wye configuration and be made of SCH 40 PVC and accept a SDR 26 sewer lateral. The saddle shall be sized to surround the liner or pipe beyond the spring line, which creates a clamping effect that draws the saddle firmly on to the liner or the pipe. Adhesive shall bond the saddle to the liner or host pipe, providing a flexible non-leaking main/ lateral connection. A special two part adhesive shall be used for HDPE liners/pipes. The saddle shall be compatible with variety of pipes including cast iron, clay, PVC and HDPE and CIPP lining. Saddle shall be the LMT or LMK Saddle system as produced by LMK technologies or approved equal.

{{Fernco couplings}}

3.4. Installation

3.4.1. General.

A. Trench excavation, in any material, shall extend for four (4) feet beyond the end of the lateral for the full depth of the lateral. If the lateral is intended to be used at a later date, then prior to backfilling, a minimum 2-inch x 4-inch treated lumber locator marker shall be placed against the end of each lateral and shall extend a minimum of 12 inches above the ground.

B. Where no wye branch is present in an existing sewer line, lateral connections shall be made with a saddle type connection or with a cut-in connection. For Saddle connections, the hole for this saddle must be cut into the existing line with extreme care. The cut-out piece is not to be dropped into the pipe. It should be kept for inspection by the Town. The center of the saddle shall be located at a 45-degree angle from the crown of the main. Installation of the saddle shall be in accordance with the manufacturer's instructions. For cut-in connections gasketed pvc repair couplings or shielded Fernco fitting's shall be used with a standard Wye –see detail. All connections to existing sewers must be witnessed and approved by a Town representative.

3.4.2. Excavation.

A. The trench shall be excavated to a depth of six inches below the outside diameter of the pipe barrel, or deeper if so specified. The width of the trench shall be as shown on the detail drawings. All of this excavation may be done by machine. The resultant subgrade shall be undisturbed, or compacted as approved by the Town's authorized representative if disturbed.

B. When the pipe is to be laid in fill, bring the fill to two feet above the elevation of the top of pipe to be laid before excavation commences. Compact the fill to 95% of the maximum density as determined by ASTM D1557-70 or AASHTO T-180, Method D (Modified Proctor). The bottom of the trench shall be compacted to 95% of maximum density prior to installation of the pipe bedding.

3.4.3. Bedding.

A. The pipe shall be bedded on 6 inches of AASHTO No. 7 stone, the full width of the trench, and shall be covered with AASHTO No. 7 stone to a height of 12 inches over the top of the pipe.

B. The bedding shall be thoroughly compacted to 95% of maximum Proctor density. The bedding shall provide uniform and continuous bearing and support for the pipe at every point between the bells.

C. Unstable Subgrade.

Where the bottom of the trench at subgrade is found to be unstable or to include ashes, cinders, any type of refuse, vegetable, or other organic material, or large pieces or fragments of inorganic material, which, in the opinion of the Town, should be removed, the Applicant shall excavate and remove such unsuitable material to the width and depth recommended by the Town. Before pipe is laid, the subgrade shall be formed by backfilling with AASHTO No. 7 or B10 stone in 3-inch layers thoroughly compacted to 95% of maximum Proctor density and the bedding prepared as hereinbefore specified.

D. Special Foundations.

Where the bottom of the trench at the subgrade is found to consist of material which is unstable to such a degree that, in the opinion of the Town, it cannot be removed and replaced with an approved material thoroughly compacted in place to support the pipe properly, a suitable foundation for the pipe shall be designed and submitted to the Town for approval.

E. Concrete Encasement.

(1) Pipes to be encased in concrete shall have minimum six inches of concrete above and below the pipe and the concrete shall be extended for the full width of the natural trench. No formwork to limit the concrete width shall be used. Two flexible pipe joints shall be provided in the pipe at a distance of three times the pipe diameter from each end of the concrete encasement, to provide pipe articulation.

(2) Pipe shall be protected against floatation during placement of concrete encasement and may require two stage concrete placement with anchor straps.

3.4.4. Laying Pipe.

A. General.

Ductile iron pipe and fittings shall be installed in accordance with requirements of AWWA C600. PVC pipe and fittings shall be installed in accordance with the requirements of the manufacturer and ASTM D2321. All pipes shall be laid to a uniform line and grade, bell ends upgrade, with a firm and even bearing along the barrel of the pipe. The spigot end of the pipe is to be centered in, shoved tight and secured against, the bell of the previously laid pipe. The interior of each pipe shall be cleaned of all excess joint and foreign material before the next pipe is laid. Pipe-laying shall commence at the lowest point and proceed upgrade. At the close of each day's work, and at such other times when pipe is not being laid, the open end of the pipe shall be closed by a watertight plug or other approved means.

B. Pipe Clearance in Rocks.

(1) Ledge rock, boulders and large stones shall be removed to provide a clearance of at least 6 inches below and on each side of all pipe and fittings.

(2) The specified minimum clearances are the minimum clear distances which will be permitted between any part of the pipe and/or fitting being laid and any part, projection or point of such rock, boulder or stone. Any rock encountered within four (4) feet of the end of lateral shall be removed.

3.4.5. Backfilling.

A. The trench may be filled from 12-inches above the top of the pipe to restoration depth (above the AASHTO No. 7 stone as specified above) with excavated material except that stones larger than eight (8) inches may not be returned to the trench and the fill shall not contain more than 20% stone in total volume.

B. The trench shall be properly tamped in lifts not to exceed the maximum thickness for the type of tamping equipment being used. All bedding and backfilling shall be compacted to 95% of maximum Proctor density. Backfilling shall not be done with frozen material. No backfilling shall be done if the material already in the trench is frozen.

C. Utility excavations in areas of existing streets, access drives, parking areas and loading areas shall be backfilled in accordance with the foregoing requirements with the following exception: the trench shall be filled with concrete, flowable fill, or GAB stone above the AASHTO No. 7 pipe bedding. GAB shall be placed and compacted to the foregoing requirements.

D. In State highways, all backfill shall be in accordance with the requirements of MD SHA.

E. Provide Two (2) rows of detectable utility marking tape above the lateral line.

3.4.6. Surface Restoration.

A. In State highways surface restoration shall be in accordance with MD SHA Standard Specifications for Construction and Materials Section 500, or as specified in the MD SHA Permit issued for the subject project.

B. In County or Town Roads, paved areas or other traffic areas surface restoration shall be in accordance with Town or Washington County Roads Department Standards as applicable.

3.4.7. Cleanouts

Cleanouts shall be cast iron with brass plugs and the top surface shall be flush with finished grade. Cleanouts shall be in the grass area and not located in the sidewalk.

3.5. Testing and Inspection

A. Lateral connections which are constructed as part of new sanitary sewer installations shall be tested and inspected as described in Section 4 - GRAVITY SEWERS of these specifications. Laterals shall be cleaned per NASSCO SEWER PIPE CLEANING specifications.

B. Lateral connections to existing sanitary sewer lines shall be visually inspected prior to commencement of backfilling. Laterals shall be inspected for alignment, depth, slope, and for fittings and pipe material used.

SECTION 4 - GRAVITY SEWERS

4.1. General

A. Regulatory Agencies.

All designs shall conform to good engineering practice and all proposed sewer construction projects shall meet the requirements of the Maryland Department of Environment, OSHA, and the Maryland Department of Labor, Licensing, and Regulation, and shall conform to the requirements contained herein.

4.2. Design

4.2.1. Diameter and Slope.

The minimum sewer diameter shall be 8 inches. All gravity wastewater mains shall be designed and constructed to give mean velocities, when flowing full, of between 2 and 10 feet per second, based on Manning's formula and using "n" value of 0.013. The minimum velocity requirement is necessary to prevent the deposition of solids.

The minimum slope for all terminal sections of sewers shall be 1.0% for a maximum distance of 400-feet.

Changes in pipe size or material shall not occur between manholes.

Pipe diameter and minimum slope shall be as follows (minimum main diameter shall be 8" and minimum lateral diameter shall be 6")

Diameter (in.)	Minimum Slopes, (ft./100ft)	Recommended Slopes (ft./100ft)
6	1	2-6.5
8, 10, or 12	0.5	0.5-6.5

4.2.2. Depth of sewers.

A. All sewers shall be designed to provide a minimum depth of cover of 5'-6" above the top of the pipe.

B. If depths of sewers greater than 14 feet are deemed to be necessary, the design should be discussed with the Town prior to formal submission of the plans for approval. In all cases where subsequent approval is given by the Town, the pipe to be used shall be epoxy lined ductile iron.

4.2.3. Location of Sewers.

A. General

Sewer mains shall normally be located within the right-of-way lines of public streets. If it is necessary to locate a sewer main on private property, the Applicant shall provide a sewer easement in the name of the Town. The easement shall consist of a 30-foot wide permanent easement, normally centered on the pipeline, and an additional 20-foot wide temporary construction easement.

B. Utility crossings shall be minimized. Maximum horizontal separation of utilities shall be provided for ease of future maintenance and health and safety reasons.

C. Sewers near Water Mains.

(1) Sewer installation near water mains shall conform to the Design Guidelines for Sewerage Facilities of the Environmental Health Administration Department of Health and Mental Hygiene.

(2) Parallel Installation: Sewers shall be laid at least 10 feet horizontally from any existing or proposed water main. The distance shall be measured edge to edge. In cases where it is not practical to maintain a 10 foot separation, the Town may allow deviation on a case-by-case basis, if supported by data from the design engineer. Such deviation may allow installation of the sewer closer to a water main, provided that the water main is laid in a separate trench or on an undisturbed earth shelf located on one side of the sewer at such an elevation that the bottom of the water main is at least 18 inches above the top of the sewer.

(3) Crossings: Whenever sewers must cross under water mains, the sewer shall be laid at such an elevation that the top of the sewer is at least 18 inches below the bottom of the water main. This vertical separation shall be maintained for the portion of the sewer located within 10 feet horizontally of any water main it crosses. The 10 feet is to be measured as a perpendicular distance from the sewer line to the water line.

(4) Exception: When it is impossible to obtain the proper horizontal and vertical separation as stipulated in Items (2) and (3) above, both the water main and sewer line shall be constructed of ductile iron pipe having mechanical joints. Other types of joints of equal or greater integrity may be used at the discretion of the Town. Where a sewer must cross over a water main, additional protection shall be provided by:

(a) A vertical separation of at least 18 inches between the bottom of the sewer and the top of the water line;

(b) Adequate structural support for the sewers to prevent excessive deflection of the joints and the settling on and breaking of the water line; and

(c) Centering the length of the water line at the point of the crossing so that the joints are equidistant and as far as possible from the sewer.

(5) The Town shall be consulted when any of the above conditions cannot be met, to discuss the use of double casing or concrete encasement of sewer and/or water lines as possible alternatives.

(6) No water pipe shall pass through, or come into contact with, any part of a sewer manhole.

D. Sewer Mains near Gas Mains and Other Utilities.

(1) Parallel Installation: Sewer mains shall be laid at least 10 feet horizontally from any existing or proposed gas main or other utility. The distance shall be measured edge to edge. In cases where it is not practical to maintain a 10 foot separation, the Town may allow deviation on a case-by-case basis, if supported by data from the design engineer.

(2) Crossings: Whenever sewer mains must cross gas mains or other utilities, a minimum vertical separation of 18 inches shall be provided measured edge to edge. This vertical separation shall be maintained for the portion of the sewer main located within 10 feet horizontally of any gas main or other utility it crosses. The 10 feet is to be measured as a perpendicular distance from the gas main or other utility to the sewer main. Where the sewer main must cross under a gas main or other utility, adequate structural support for the gas main or other utility shall be provided to prevent excessive deflection of the joints and the settling on and breaking of the sewer line.

(3) The Town shall be consulted when any of the above conditions cannot be met, to discuss possible alternatives.

4.2.4. Borings.

All construction methods and materials proposed for use in tunneling, jacking or boring shall be submitted to and approved by the Town prior to construction. The encasement pipe shall be installed with even bearing throughout its entire length, and shall slope to one end with the same slope as the sewer pipe. The ends of the casing pipe shall be sealed as shown in the standard detail drawings.

4.3. Materials and Equipment

(References to ASTM, AWWA and ANSI Specifications imply Latest Edition.)

4.3.1. Ductile Iron Pipe and Fittings.

A. Ductile Iron Pipe.

(1) Ductile iron pipe shall conform to AWWA C151 and ASTM A746. Pipe shall be supplied in standard lengths as much as possible with laying lengths of either 18 ft or 20 ft nominal lengths. Pipe shall be manufactured by Griffin Pipe Products Co. or approved equal.

(2) Ductile iron pipe and fittings for use in gravity sewers, service lines, and force mains shall be lined with either Protecto 401 ceramic-filled amine cured epoxy or Series 431 Perma-Shield® PL ceramic epoxy, or approved equal. These linings shall be applied in accordance with the manufacturer's recommendations.

B. Joints.

Joints shall be rubber-gasket push-on type or rubber-gasket mechanical joint type conforming to AWWA C111. Gasket shall be of SBR. Ductile iron for use as restrained joint shall be mechanical joint pipe using Uni-Flange joint restraining glands. Pipe shall be used as indicated on drawings or details.

C. Fittings.

Mechanical joint fittings in sizes 4" through 24" shall meet the requirements of AWWA C153. Fitting shall be manufactured from a high strength, impact resistant ductile iron, having a minimum tensile of 70,000 psi with a minimum yield of 50,000 psi and a minimum elongation of 5%. Fitting wall thickness shall be CL 54 through 23" diameters and CL 56 through 24" diameters. Fittings shall be rated at 350 psi. All accessories, glands, bolts, and gaskets shall conform to ANSI A221.11 AWWA C111. Fitting shall be listed with Underwriters Laboratories. All fittings must be manufactured domestically. Where fittings are to be used with PVC piping systems, appropriate gaskets shall be furnished if required. Wyes shall be used for lateral connections. Fittings shall be as manufactured by Griffin Pipe Products Co. or approved equal.

D. Minimum Thickness.

Thickness design shall be per AWWA C150, Class 52.

4.3.2. Polyvinyl Chloride Sewer Pipe and Fittings.

A. Polyvinyl Chloride Pipe.

All PVC pipe and fittings shall have the National Sanitation Foundation (NSF) seal of approval and be certified by IAPMO to be incompliance with the Uniform Plumbing Code. Polyvinyl chloride (PVC) sewer pipe and fittings shall be PVC SDR 26 with full diameter dimensions and shall conform to ASTM D3034. PVC pipe and fittings shall be produced by an extrusion process and shall be homogeneous throughout, free from cracks, holes, foreign materials, inclusions, ripples, screw memory, or other defects. The pipe and fittings shall be uniform in color. Pipe with blisters, bubbles, cuts, ripples, or scrapes on inside or outside surfaces, or other imperfections which impair the performance or life of the pipe, will be rejected.

Standard lengths shall be20 ft and not lay less than 14 feet +/- 1 inch except for manhole stubs. All PVC pipe shall be manufactured by North American Pipe Corp. or approved equal.

B. Joints.

PVC pipe and fittings shall have bell and spigot push-on joints. The bell shall consist of an integral wall section with a solid cross-section elastomeric gasket (as manufactured by North American Pipe Corporation or approved equal) securely locked in place to prevent displacement during assembly. Installation of elastomeric gasketed joints and performance of the joint shall conform to ASTM F477, ASTM D3139, ASTM D3212 or UNI-B-1. No solvent cement joints will be permitted in field construction.

C. Fittings

(1) All fittings and accessories for sewers shall have bell and/or spigot configurations compatible with the pipe. Sewer main fittings shall be made from PVC compounds as defined and described in ASTM designations D1784 for rigid PVC compounds and all PVC fittings supplied shall have the following markings: Manufacturer's name or trademark, Nominal size, Material designation, and ASTM designation

(2) PVC fittings in sizes 4" through 8" shall be manufactured by the injected molding process. PVC fittings in sizes 10" through 27" shall be manufactured by the factory fabricated process. The minimum bell depth on the above mentioned fittings shall be as specified per ASTM D3202, section 6.2 and 7.3.2 4" through 8", and section 7.11 on 10" and larger, as shown in the following sizes.

Diameter	Minimum Bell Depth
4"	1.75"
6"	3.00"
8"	4.00"
10"	5.00"
12"	6.00"

(3) Sealing gaskets shall have a minimum cross section area of 0.20 square inch. Fittings shall be so designed to have a minimum load resistance on an 8 x 6 wye of 900 lbs at a deflection of 5%.

(4) Flexible Coupling (FERNCO). Flexible couplings composed of elastomeric PVC shall conform to ASTM C443, C425, C564 and D1869 as manufactured by Fernco, Inc. Each coupling shall be supplied with four Type 305 stainless steel adjustable clamps. Only Stainless steel shielded connections are acceptable, Fernco Strong Back RC Series Repair Couplings or approved equal.

D. Certifications of compliance of the above specifications shall be required from the manufacturer before acceptance of delivery or approval for use.

4.3.3. Alternative Gravity Sewer Pipe Materials.

Alternative gravity sewer pipe materials may be considered and will be subject to approval by the Town on a case-by-case basis. Full details of alternatives must be submitted.

4.3.4. Stubs.

Pipe stubs for penetrations into existing manholes shall be SDR-26, ASTM D3034 PVC gasketed heavy wall sewer pipe and fitting.

4.3.5. Casings.

A. Casing shall be steel unless approved otherwise. The steel casing pipe shall have a minimum yield strength of 35,000 psi, have a thickness as required but not less than 0.375 inches, be equipped with grout holes and conform to AWWA C200 and ASTM A53.

B. Casing interior and exterior shall be painted with two coats bitumastic enamel coating in accordance with AWWA C203.

C. Insulators shall be installed on the carrier pipe and end seals on the casing pipe. Refer to Detail 10 on the use of end seals on the casing, spacing of the insulators, and the cavity seal (between the inside diameter of the casing and the outside diameter of the pipeline). Casing insulators and end seals shall conform in design to Model 60 insulators and Multiflex molded end seals as manufactured by Maloney Pipeline Products Company, T.D. Williamson, Inc., or an approved equal.

D. Minimum casing diameter shall be in accordance with the Town Detail, and MD SHA requirements as applicable.

4.4. INSTALLATION

4.4.1. Excavation.

A. The trench shall be excavated to a depth of six inches below the outside diameter of the pipe barrel, or deeper if so specified. The width of the trench shall be as shown on the detail drawings. All of this excavation may be done by machine. The resultant subgrade shall be undisturbed, or compacted as approved by the Town's authorized representative if disturbed.

B. When the pipe is to be laid in fill, bring the fill to two feet above the elevation of the top of pipe to be laid before excavation commences. Compact fill to 95% of the maximum density as determined by ASTM D1557-70 or AASHTO T-180, Method D (Modified Proctor). The bottom of the trench shall be compacted to 95% of maximum density prior to installation of the pipe bedding.

4.4.2. Bedding.

A. The pipe shall be bedded on 6 inches of AASHTO No. 7 stone, the full width of the trench, and shall be covered with AASHTO No. 7 stone to a height of 12 inches over the top of the pipe.

B. The bedding shall be thoroughly compacted to 95% of maximum density. The bedding shall provide uniform and continuous bearing and support for the pipe at every point between the bells.

C. Unstable Subgrade.

(1) Where the bottom of the trench at subgrade is found to be unstable or to include ashes, cinders, any type of refuse, vegetable, or other organic material, or large pieces or fragments of inorganic material, which, in the opinion of the Town, should be removed, the Applicant shall excavate and remove such unsuitable material to the width and depth recommended by the Town. Before pipe is laid, the subgrade shall be formed by backfilling with AASHTO No. 7 stone in 3-inch (uncompacted thickness) layers thoroughly compacted to 95% of maximum density and the bedding prepared as hereinbefore specified.

(2) Flowable Backfill meeting the requirements of MD SHA Specifications for Construction & Materials Section 314 may be used as an alternative to backfilling with stone. Material consists of a mixture of cement and water which shall have a 28-day unconfined minimum compressive strength of 100 psi based on the

manufacturer's certification, and shall be placed in accordance with the manufacturer's recommendations.

D. If potentially corrosive materials are encountered, polyethylene encasement shall be installed to protect ductile iron pipe in accordance with ANSI/AWWA C105/A21.5.

E. Special Foundations.

Where the bottom of the trench at the subgrade is found to consist of material which is unstable to such a degree that, in the opinion of the Town, it cannot be removed and replaced with an approved material thoroughly compacted in place to support the pipe properly, a suitable foundation for the pipe shall be designed and submitted to the Town for approval.

F. Concrete Encasement.

Pipes to be encased in concrete shall have minimum six inches of concrete above and below the pipe and the concrete shall be extended for the full width of the natural trench. No formwork to limit the concrete width shall be used. Flexible pipe joints shall be provided in the pipe at a distance of three times the pipe diameter from the ends of the concrete encasement, to provide pipe articulation. Pipes shall be protected against flotation during placement of concrete encasement. This may require two stage concrete placement combined with anchor straps.

4.3.3. Laying Pipe.

A. Ductile iron pipe and fittings shall be installed in accordance with requirements of AWWA C600. PVC pipe and fittings shall be installed in accordance with the requirements of the manufacturer and ASTM D2321. No more than 10% of a section of sewer between two manholes shall consist of laying lengths less than 10 feet. All pipes shall be laid to a uniform line and grade, bell ends upgrade, with a firm and even bearing along the barrel of the pipe. The spigot end of the pipe is to be centered in, shoved tight and secured against the bell of the previously laid pipe. The interior of each pipe shall be cleaned of all foreign material before the next pipe is laid. Pipe laying shall commence at the lowest point and proceed upgrade. At the close of each day's work, and at such other times when pipe is not being laid, the open end of the pipe shall be closed by a watertight plug or other approved means.

(1) Grade and Alignment Control.

Prior to construction, three copies of a grade sheet for each manhole run shall be furnished to the Town. Grade and alignment control shall be established by one of the following methods:

(a) Laser - Direct reading

(b) Twin string line offset

B. Pipe Clearance in Rocks.

(1) Ledge rock, boulders and large stones shall be removed to provide a clearance of at least 6 inches below and on each side of all pipe and fittings for pipes 24 inches in diameter or less, and 9 inches for pipes larger than 24 inches in diameter.

(2) The specified minimum clearances are the minimum clear distances which will be permitted between any part of the pipe and/or fitting being laid and any part, projection or point of rock, boulder or stone.

C. Pipes at Manholes or Other Rigid Structures.

Pipes directly connected to or supported by rigid structures (manholes, vaults, wall, etc.), shall not have a length beyond the rigid support in excess of that shown in the detail drawings. Two flexible joints shall be required within three pipe diameters of a rigid structure.

4.3.4. Backfilling.

A. The trench may be filled with excavated material above the AASHTO No. 7 or No. 10 stone as specified above except that stones larger than eight (8) inches may not be placed in the trench and the fill shall not contain more than 20% stone in total volume.

B. The trench shall be properly tamped in lifts not to exceed the maximum thickness for the type of tamping equipment being used. A ll bedding and backfilling shall be compacted to 95% of maximum density as determined by ASTM D1557-70 or AASHTO T-180, Method D (Modified Proctor). Backfilling shall not be done with frozen material. No backfilling shall be done if the material already in the trench is frozen.

C. Utility excavations in areas of streets, access drives, parking areas and loading areas shall be backfilled in accordance with the foregoing requirements with the following exception the trench shall be filled with concrete, flowable fill, CR-6 or GAB stone above the AASHTO No. 7 pipe bedding. Aggregates shall be placed and compacted to the foregoing requirements.

D. In State highways, all backfill shall be in accordance with the requirements of MD SHA.

E. Special attention shall be made to properly compact the pipe haunching area.

4.3.5. Surface Restoration.

A. In State highways surface restoration shall be in accordance with MD SHA Standard Specifications for Construction and Materials Section 500, or as specified in the MD SHA Permit issued for the subject project.

B. In County roads, Town Roads, paved areas or other traffic areas surface restoration shall be in accordance with Washington County Roads Department Standards.

4.5.6. Bored Crossings

A. The carrier pipe shall be installed to the exact line and grade required within the casing pipe utilizing a levelling grout course, adjustable pipe supports, or other methods as approved by the Town.

B. The carrier pipes shall be supported within the casing pipes so that the pipe bells do not rest directly on the casing. The load of the carrier pipes shall be distributed along the casing by the method of support shown on the detail drawings.

C. All work shall be performed in conformance with the requirements of MD SHA or other regulatory agencies involved.

4.5. Testing & Inspection

4.5.1. Alignment Test

After the mains have been laid and backfill (bedding) placed, the Town's inspector will flash a light between manholes or manhole locations to determine whether the alignment of the sewer is true and whether any pipe has been displaced, broken or otherwise damaged subsequent to laying. This test will again be conducted before final acceptance of the sewer. Each section (manhole to manhole) of sewer shall show a good light circle throughout its length and any and all defects shall be corrected to the satisfaction of the Town before acceptance.

4.5.2. Allowable Deflection Test

A. Pipe deflection measured not less than 30 days after the backfill has been completed as specified shall not exceed 5 percent. Deflection shall be computed by multiplying the amount of deflection (nominal diameter less minimum diameter when measured) by 100 and dividing by the nominal diameter of the pipe.

B. Deflection shall be measured with a rigid mandrel (Go/No Go) device cylindrical in shape and constructed with a minimum of nine evenly spaced arms or prongs. Drawings of the mandrel with complete dimensions shall be submitted to the Engineer for each diameter of pipe to be tested. The mandrel shall be hand pulled through all sewer lines. Provide certification that these tests have been conducted to the Town. These tests must be witnessed and approved by the Town's authorized representative.

C. Any section of sewer not passing the mandrel shall be uncovered at no additional cost to the Owner and the bedding and backfill replaced to prevent excessive deflection. Repaired pipe shall be retested at no additional cost to the Owner. Retested pipe shall not deflect more than 4 percent.

4.5.3. Leakage Test

A. General

(1) Sewers shall be tested for leakage only after all sewers and sewer laterals, including stoppers, are installed. Each sewer section between manholes including all laterals will be tested with low pressure air. Testing will be done only after all backfilling has been completed and trench settlement has been minimized. The Applicant shall furnish all labor, materials, tools, equipment and accessories necessary to perform the required tests. All tests shall be made in the presence of, and to the complete satisfaction of the Town or the Town's inspector.

(2) Submit copies of test conditions and results to Town for each section tested.

(3) Test the first section of pipeline as soon as it is installed to demonstrate that the work conforms to this Section.

(4) Testing of pipe shall closely follow pipe laying. No more than 1000-ft of pipe shall remain untested at any time.

(5) Contractor shall notify the customers 48 hrs. prior and on the day when service will be interrupted for testing.

B. Exfiltration Test with Air

(1) Submit the proposed method of testing to the Town's authorized representative for approval. Air testing shall be performed in accordance with the procedures described in UNI-B-6-98 (PVC or DI), ASTM C828 (Clay), or ASTM C924 (Concrete) for the appropriate pipe material.

(2) The equipment shall be specifically designed and manufactured for testing pipelines with low-pressure air and shall be provided with an air regulator valve or air safety valve set to prevent the air pressure in the pipeline from exceeding 9 psig. It is extremely important that all plugs be installed and braced to prevent blowouts. Note that the force of 250 pounds is exerted on an 8-inch plug by an internal pressure of 5-psig, and a force of 5,090 pounds is exerted on a 36-inch plug by an internal pressure of 5 psig. No persons should be allowed in the alignment of the pipe during testing.

(3) The above ground air control equipment shall include a shut-off valve, pressure regulating valve, pressure relief valve, input pressure gauge and a continuous monitoring pressure gauge having a range from 0 to 10 or 15 psi. The continuous monitoring gauge shall be no less than 4-inches in diameter with minimum divisions of 0.10 psi and an accuracy of ±0.04 psi.

(4) Low pressure air shall be slowly introduced into the sealed line until the internal air pressure reaches 4.0 psig greater than the average back pressure of any groundwater above the pipe, but not greater than 9.0 psig. The air pressure correction which must be added to the 3.5 psig normal test starting pressure shall be calculated by dividing the average vertical height in feet of groundwater above the top of the sewer to be tested by 2.31. The result gives the air pressure correction in pounds per square inch (psi) to be added.

(5) After a constant pressure of 4.0 psig (greater than the average groundwater back pressure over the pipe) is reached, the air supply shall be throttled to maintain that internal pressure for at least 2 minutes. This time permits the temperature of the entering air to equalize with the temperature of the pipe wall.

(6) When the temperatures have been equalized and the pressure stabilized at 4.0 psig (greater than the average groundwater backpressure), the air hose from the control panel to the air supply shall be shut off or disconnected. The continuous monitoring pressure gauge shall then be observed while the pressure is decreased to no less than 3.5 psig (greater than the average groundwater backpressure over the pipe). At a reading of 3.5 psig, or any convenient observed pressure reading between 3.5 and 4.0 psig, (greater than the average groundwater backpressure),timing shall commence with a stop watch or other device that is at least 99.8 percent accurate.

(7) The time required for a 0.5 psi pressure drop in PVC or DI pipe shall not be less than the time computed by using the Ramseier's equation and as indicated in the table included with this Section:

$$T = \frac{0.085xDxK}{2xQ}$$

Where: T = Shortest time, in seconds, allowed for the air pressure to drop 0.5 psig,

K = 0.000419 DL, but not less than 1.0,

Q = 0.0015 cubic feet per minute per square foot of internal pipe surface,

D = Nominal pipe diameter in inches, and

L = Length of pipe being tested in feet.

(8) If the results of the air test are unsatisfactory, perform the exfiltration test as outlined above. If both tests are unsatisfactory, the Contractor shall, at his own expense, determine the source of the leakage and make all necessary corrections and retest. The extent and type of repair which may be allowed, as well as results, shall be subject to approval of the Town's authorized representative.

4.5.4. Cleaning and Video Inspection.

At the conclusion of the work, thoroughly clean all pipelines by flushing with water or other means to remove all dirt, stones, pieces of wood, or other material which may have entered the pipes during the construction period per NASSCO SEWER PIPE CLEANING specifications. Debris cleaned from the lines shall be removed from the low end of the pipeline. If after this cleaning, obstructions remain, they shall be removed. After the pipelines are cleaned the pipeline shall be video inspected by a PACP certified contractor and the video of the pipes provided to the Town in .MP4 or equivalent digital format. If any defective pipes or joints are discovered, they shall be repaired or replaced as directed by the Town's authorized representative.

UNI-B-6-98

MINIMUM SPECIFIED TIME REQUIRED FOR A 0.5 PSIG PRESSURE DROP FOR SIZE AND LENGTH OF PVC of DI PIPE INDICATED FOR Q=0.0015

1 Pipe Diameter (in.)	2 Minimum Time (min.: sec)	3 Length for Minimum Time (ft)	4 Time for Longer Length (sec)	Specification Time for Length (L) Shown (min:sec)							
				100 ft.	150 ft.	200 ft.	250 ft.	300 ft.	350 ft.	400 ft.	450 ft.
4	1:53	597	.190L	1:53	1:53	1:53	1:53	1:53	1:53	1:53	1:53
6	2:50	398	.427L	2:50	2:50	2:50	2:50	2:50	2:50	2:51	3:12
8	3:47	298	.760L	3:47	3:47	3:47	3:47	3:48	4:26	5:04	5:42
10	4:43	239	1.187L	4:43	4:43	4:43	4:57	5:56	6:55	7:54	8:54
12	5:40	199	1.709L	5:40	5:40	5:42	7:08	8:33	9:58	11:24	12:50
15	7:05	159	2.671L	7:05	7:05	8:54	11:08	13:21	15:35	17:48	20:02
18	8:30	133	3.846L	8:30	9:37	12:49	16:01	19:14	22:26	25:38	28:51
21	9:55	114	5.235L	9:55	13:05	17:27	21:49	26:11	30:32	34:54	39:16
24	11:20	99	6.837L	11:24	17:57	22:48	28:30	34:11	39:53	45:35	51:17
27	12:45	88	8.653L	14:25	21:38	28:51	36:04	43:16	50:30	57:42	64:54
30	14:10	80	10.683L	17:48	26:43	35:37	44:31	53:25	62:19	71:13	80:07
33	15:35	72	12.926L	21:33	32:19	43:56	53:52	64:38	75:24	86:10	96:57
36	17:00	66	15.384L	25:39	38:28	51:17	64:06	76:55	89:44	102:34	115:23
42	19:54	57	20.942L	34:54	52:21	69:49	87:15	104:42	122:10	139:37	157:04
48	22:47	50	27.352L	45:35	68:23	91:11	113:58	136:46	159:33	182:21	205:09
54	25:31	44	34.618L	57:42	86:33	115:24	144:15	173:05	201:56	230:47	259:38
60	28:20	40	42.738L	71:14	106:51	142:28	178:05	213:41	249:18	284:55	320:32

Note: If there has been no leakage (zero psig drop) after one hour of testing, the test section shall be accepted and the test complete.

SECTION 5 - MANHOLES

5.1. Design

A. Manholes for gravity sewers shall be placed at all changes of direction, pipe intersections and at intervals not greater than 400 feet. Manholes shall be placed at all changes in grade, pipe size, and alignment. External drop manholes are required if the invert of the incoming pipe is greater than 2'-0" above the invert of the outgoing pipe. All external drop manholes shall be lined with PVC or HDPE. Lining shall cover the invert, walls, and corbelled top up to the cast iron manhole frame.

B. Unless otherwise noted, manholes shall be constructed of precast concrete with cast iron frames and covers, as shown on the detail drawings contained herein. The invert channels shall be smooth and semicircular in shape conforming to the inside of the adjacent sewer section. Channels for changes in direction of flow shall be as large a radius as the size of the manhole will permit.

C. All manhole covers shall be set to finished grade in paved areas and 12 inches to 18 inches above grade in rights-of-way or unpaved areas. If a manhole is to be at grade, a manhole insert shall be installed. In flood plains, or where deemed necessary by the Town, a watertight manhole cover shall be installed. If the proposed construction includes an existing street or right-of-way in which the existing grade will be changed, the Applicant shall be responsible for adjusting all existing manholes to finished grade. All adjustments required shall be in accordance with methods approved by the Town. Such approval must be obtained in writing prior to construction.

D. All wastewater pipelines shall have a minimum 0.1 feet drop through the manhole. Where wastewater pipelines change direction, the invert elevation shall drop a minimum of 0.25 feet through the manhole.

E. Lift holes in manholes shall not extend through the entire width of the wall.

F. Manholes shall be constructed in accordance with the standard details noted on the detail drawings contained herein. Shop drawings shall be submitted for approval.

5.2. Materials and Equipment

4.1.1. Precast Reinforced Concrete Manholes.

A. Precast reinforced concrete manhole risers and tops shall conform to ASTM Specification C-478 Latest Edition, shall be of watertight construction, and shall have an interior diameter of 48” unless required otherwise by the Town. Manholes shall be produced in accordance with the Town detail. Concrete strength shall be a minimum 4,000 psi in 28 days. Wire reinforcement 4x12 – W4/W2.1 shall be used and shall meet ASTM C-478-8 requirements. Cement shall be Capital Cement Corp. Portland Type II, Independent Cement Corp. Portland Type I/II, or Essroc Cement Company Portland Type II.

B. The finished product shall be smooth and uniform without any cracks, chips, voids, air pockets or other defects.

C. Joints between manhole sections shall be provided with preformed plastic joint sealing material EZ-Stick as manufactured by Press-Seal Gasket Corp.or approved equal. The preformed joint sealer shall be protected by a removable two-piece wrapper and shall be applied in strict accordance with the manufacturer's recommendations. Joints between manhole sections may be made by other methods if approved by the Town. Shop drawings and specifications must be submitted for approval prior to installation.

D. For all manholes the external surface shall be coated with coal tar epoxy from the frame down past the joint between the cone and top riser section. For drop manholes and for manholes accepting a forced main and the next manhole down from the forcemain receiving manhole the interior surface shall be coated with Parsonpoxy SEL-80 High Build Epoxy Coating or equal which shall be applied to the manufacturers specifications.

E. Manhole bases shall be cast-in-place Type II Portland cement concrete, and shall have a compressive strength of not less than 4,000 psi after 28 days (tests to be in accordance with ASTM Specification C-39, Latest Revision). Manhole bases shall have a 6” flange as shown on the detail drawings.

F. Precast manhole bases shall have flexible watertight resilient connector seals at the point of entry of any sewer pipe into the manhole. The seals shall comply with ASTM C-923. The seals shall be cast into the manhole base to become an integral part of the concrete. The seals shall be Star Seal as manufactured by Vertex Incorporated or equivalent. Manhole bases shall have a 6” flange as shown on the detail drawings.

G. Precast concrete grade rings for levelling and adjusting to grade shall be of compressive strength as specified above. Design must provide for full bearing of manhole frame. Joints between grade rings must be sealed using EZ-Stick as manufactured by Press-Seal Gasket Corp.or other approved sealing material. Cement mortar will not be permitted in any joints.

H. Manhole steps shall be made of 0.5” steel coated with fusion bonded epoxy, they shall meet ASTM C-478 requirements and be installed per the manufacturers’ directions and they shall be as produced by the American Step Company, Inc.

5.1.2. Frame and Cover.

A. Manhole frame and cover shall be heavy duty type made of CL35B Cast Iron and meet a heavy duty load rating HS-25, the clear opening of the frame shall be 24" in diameter, The cover shall be 2 3/8” in thickness and 25 7/8 in diameter and the words "SANITARY SEWER" and “Town of Boonsboro shall be cast into the top of the cover. The Frame shall be the 1545Z3 Model and the Cover shall be the 1544 C model as produced by The EJ Group Inc in the USA.

B. Frames shall be drilled or cast with holes for anchor bolts. All manhole cover frames shall be securely attached to the manhole by use of anchor bolts.

C. The joint between the frame and the precast manhole section shall be provided with preformed plastic joint sealing material equal to Rub’R-Nek as manufactured by K.T. Snyder Company, Inc. of Houston, TX, or approved equal, and shall be watertight. No mortar joints will be permitted.

D. Castings shall be manufactured true to pattern. Component parts shall fit together in a satisfactory manner without binding. Castings shall be smooth and well cleaned by shot blasting. Metal shall be ASTM-A-48 class 35B gray iron and castings shall have a minimum tensile strength of 35,000 psi and meet a HS-25 loading.

E. An HDPE anti-inflow dish as produced by parsons environmental shall be provided and installed in all manhole frames that are not of the water tight variety.

5.1.3. Watertight Manhole Frame and Cover.

A. Watertight manhole frames shall be of soft grey iron similar, the cover shall be 2 3/8" in thickness and 25 7/8 in diameter and the words "SANITARY SEWER" and "Town of Boonsboro shall be cast into the top of the cover. The Frame shall be the 1545Z3 Model and the Cover shall be the 545A1GS model with cam lock assemblies as produced by The EJ Group Inc in the USA.

B. Watertight frames shall be securely attached to the manhole by use of anchor bolts.

C. The joint between the frame and the precast manhole section shall be provided with preformed plastic joint sealing material equal to EZ-STIK as manufactured by Press-Seal, or approved equal, and shall be watertight. No mortar joints will be permitted.

D. Shop drawings for this type of cover must be submitted for approval before installation.

5.1.4. Manhole Inserts.

Inserts with straps shall be of HDPE with deep bowl as manufactured by Parsons Environmental Products of Reading PA., or approved equal.

5.1.5. Manhole Steps.

A. Manhole steps shall be composed of ½ inch deformed steel reinforcing bar completely coated with Scotchkote 426 fusion bonded epoxy and encapsulated with a copolymer polypropylene outer layer as produced by the American Step Company or approved equal.

B. The Town reserves the right to have steps tested according to the latest revision of ASTM Specification C-478 at the Applicant's cost.

C. Manhole steps shall be positioned in the manhole in such a manner to permit easy access to the manhole and not conflict with either influent or effluent lines. The first step shall be no further than 24-inches from the top of the manhole.

5.1.6. Protective Coatings and Linings

A. Exterior Coating

(1) Dampproofing shall be Henry 787 Elastomeric Fluid-Applied Waterproofing Membrane or approved equal.

B. Interior Coating for standard manholes shall be Henry 787 Elastomeric Fluid-Applied Waterproofing Membrane or approved equal.

C. Interior Coating (hydrogen sulfide corrosion protection) for manholes with internal drop of less than 2-feet or those having watertight lids shall be CPP by Epoxytec, Parsonspoxy by parsons environmental, Propoxy 2228 by Pro-Guard Coatings, or approved equal. The color shall be white.

D. Interior Lining (hydrogen sulfide corrosion protection) for manholes with internal drop of 2-feet or greater or force main terminal manholes and the next manhole(s) down from the force main terminal manhole shall be one of the following:

(1) A High Density Polyethylene (HDPE) liner system to provide an impermeable lining on the interior concrete surfaces. The liner shall be installed during the manhole casting process in accordance with the manufacturer's instructions. The interior surfaces to be protected shall include the wall, ceiling, pipe entries and structure chimney. The HDPE lining system shall be as manufactured by Predyl systems or equal.

(2) A ¼" thick coating of CPP as produced by Epoxytec or equal and installed per the manufacturer's instructions.

5.3. Installation

5.3.1. General.

The relevant parts of Section 4 GRAVITY SEWERS shall apply regarding earthwork.

5.3.2. Precast Concrete Bases.

A. Bedding.

Install bases on an 8-inch deep compacted layer of aggregate meeting requirements of Pipe Bedding as specified previously in Section 4 GRAVITY SEWERS.

B. When using prefabricated pipe opening seals (i.e., Star Seal by Vertex Inc.) for connecting pipes into manholes, and such seals create an annular space on interior and exterior of manhole wall pipe openings after pipe connection is made, fill such annular spaces with preformed flexible plastic sealing compound.

(1) Tightly caulk sealing compound into annular spaces in a manner to completely fill the spaces and render the installation watertight.

(2) Following sealing compound installation, trowel compound surface smooth and flush with interior face of manhole.

5.3.3. Concrete Channel Fill.

A. Field pour concrete channel fill for each manhole base.

(1) Form inverts directly in concrete channel fill.

(2) Accurately shape invert to a semi-circular bottom conforming to inside of connecting pipes, and steel trowel finish to a smooth dense surface.

(3) Make changes in size and grade gradually.

(4) Make changes in direction of entering sewer and branches to a true curve of as large a radius as manhole size will permit.

(5) Make slopes gradual outside the invert channels.

B. Use 4,000 psi Type II Portland Cement concrete unless indicated otherwise on Detail drawings.

C. Channels shall be full pipe height and PVC channels may be used for invert section.

5.3.4. Manhole Installation.

A. Precast Components.

Provide precast reinforced concrete straight riser, tapered riser and top sections necessary to construct complete manholes. Fit the different manhole components together to permit watertight jointing and true vertical alignment of manhole steps.

B. If rubber compression gaskets are used between sections, install gaskets and join sections in accordance with written instructions of manhole component manufacturer.

C. If preformed plastic sealing compound is used between sections, install sealing compound in accordance with manufacturer's recommendations, and join sections also in accordance with written instructions of manhole component manufacturer.

(1) Prime joint surfaces if required by preformed sealing compound manufacturer.

(2) If sealing compound is installed in advance of section joining leave exposed half of two piece protective wrapper in place until just prior to section joining.

(3) Use preformed sealing compound as the sole element utilized in sealing section joints from internal and external hydrostatic pressure.

(4) Following manhole section installation, trowel sealing compound surface smooth and flush with interior face of manhole.

(5) Make pipe connections into manhole walls as specified previously for pipes connecting into manhole bases.

D. Backfill carefully and evenly around manhole sections in accordance with the backfilling requirements of Section 4.4

5.3.5. Manhole Pipe Connections.

Construct manhole pipe connections, including pipe stubs, as specified above. Close or seal pipe stubs for future connections with a gasketed watertight plug. Provide a treated 4x4 painted green post set solidly in the ground to mark the stub.

5.3.6. Frame and Cover Installation.

A. Adjust frames using precast Grade rings. Set precast grade rings in preformed plastic joint sealing material equal to EZ-STIK as manufactured by Press-Seal or approved equal.

B. Bolt manhole frames in place on manhole top section, or on steel reinforced precast concrete grade rings, if required, after installing ½-inch thick preformed plastic sealing compound on bearing surface of manhole frame and between grade rings. Remove excess sealing compound squeeze-out after manhole frame is bolted in place.

C. Use bolts of sufficient length to properly pass through steel reinforced precast concrete grade rings, if any; engage full depth of manhole top section inserts and allowing enough threaded end to pass through manhole frame to properly tighten nut and washer.

5.3.7. Parging and coating.

A. Parge the top collar where the manhole frame meets the manhole riser as shown in the Detail with non shrink grout. Apply Damp proofing (Henry 787 Elastomeric Fluid-Applied Waterproofing Membrane or approved equal) from the top of the frame down past the first joint where the eccentric cone section meets the base section

5.3.8. Drop Manholes.

Shall be constructed as depicted on the Detail Drawings.

5.4. Testing and Inspection

A. All manholes shall be tested for water infiltration. The Applicant shall furnish all labor, materials, water, tools, equipment and accessories necessary to perform the required tests. All tests shall be made in the presence of and to the complete satisfaction of the Town.

B. The manhole shall be thoroughly cleaned and all openings sealed to the satisfaction of the Town. All pipe openings in the base and the walls shall be plugged with plugs properly designed to provide a watertight and airtight seal. All excess joint sealing material protruding into the manhole shall be removed.

C. There shall be no groundwater around the outside of the manhole during the vacuum test. If there is groundwater around the manhole during the vacuum test and any water is found in the manhole at the conclusion of the test, it shall be deemed to have failed the test.

D. The manhole shall be tested using the vacuum testing method (ASTM C1244).

(1). Install an inflatable circular rubberized test head in the manhole cover frame. Evacuate the air until the internal air pressure of the manhole is lowered by 10-inches of mercury. Close the valve on the vacuum line and shut off the vacuum pump.

(2). Determine the time (in seconds) for the vacuum pressure to drop to 9-inches of mercury.

Note 10 InHg = 4.9 PSI, 9 InHg = 4.4 PSI,

Manhole Depth (ft.)	Time (sec)		
Diameter =	48"	60"	72"
8	20	26	33
10	25	33	41
12	30	39	49
14	35	46	57
16	40	52	65
18	45	59	73
20	50	65	81
22	55	72	89
24	59	78	97
26	64	85	105
28	69	91	113
30 and greater	74	98	121

(3). The manhole shall pass the test if the time for the vacuum reading to drop from 10-inches to 9-inches of mercury meets or exceeds the values indicated in the table.

(4). If the manhole fails the initial test, the Applicant shall determine at his own expense the source of the leakage. At no cost to the Town, the Applicant shall repair or replace all defective material and/or workmanship and shall conduct such additional retesting as required to demonstrate that the manhole meets the requirements. All materials and methods used to repair the manholes shall meet with the approval of the Town's authorized representative. Use of or failure of this vacuum test shall not preclude acceptance by appropriate water infiltration or exfiltration (hydrostatic) testing per ASTM C 969, or other means.

SECTION 6 - FORCE MAINS

6.1 General

A.. Force mains described and specified in this section are sewers which convey sewage under high pressure from pumping stations to locations in the gravity sewer system.

B. Force mains shall be installed in strict accordance with these specifications, and any applicable practices and precautions required for gravity sewers (Section 4) are equally applicable to the installation of force mains. These include, but are not limited to, excavation, pipe bedding, concrete encasement, and backfilling.

6.2. Design

6.2.1. Pipe Material and Diameter of Pipe.

Pipe materials for force mains shall be Ductile Iron, or HDPE. The diameter shall be determined by the flow required to be conveyed and shall not be less than 4 inches.

6.2.2. Vertical Alignment.

During the installation of a force main, the pipe shall be laid at a constantly increasing grade to each air release manhole, or point of discharge. The Applicant shall provide sufficient construction control to assure that there are no sags or decrease in slope in the force main which could tend to accumulate and trap air.

6.2.3. Thrust Restraints and Blocking.

Thrust restraints shall be provided at all tees, crosses, bends, wyes, pipe ends, or other locations that have unbalanced pressure forces.

6.3.4. Air Valves.

The use of Air Release Valves will only be considered if it is demonstrated that they are absolutely necessary and that no alternatives are possible.

6.3. Materials and Equipment

5.3.1. Ductile Iron Pipe

A. Pipe shall conform to ANSI Specification A21.51 or AWWA. C151, latest edition, for the material class or pressure designated and ANSI A21.50 or AWWA C150, latest edition, for wall thickness.

B. Minimum Thickness: Class 52.

C. Pipe shall be by U.S. Pipe and Foundry Company, Inc., Griffin Pipe Products Company, American Ductile Iron Pipe Company, or approved equal.

D. Joints

(1) Ductile iron pipe shall have rubber-gasket push-on joint or rubber-gasket mechanical joint. Rubber-gasket joints shall conform to AWWA C111. Gasket shall be of SBR. Ductile iron for use as restrained joint shall be mechanical joint pipe using Uni-Flange joint restraining glands. Pipe shall be used as indicated on drawings or details.

(2) Restrained joints shall be "Locked-type" joints manufactured by the pipe and fitting manufacturer that utilize restraint independent of the joint gasket. Restrained joints shall be suitable for the specified test pressure or the pressure rating of the pipe, whichever is greater. “Megalug” Series 1100 mechanical joint retainer glands as manufactured by EBAA Iron Inc. of Texas can be selected for restraining the mechanical joint of ductile iron pipe. Push-on restrained joints as manufactured by the pipe supplier or manufacturer, such as “Field-Lok” by U.S. Pipe or approved equivalent may be used subject to the Town's approval.

(3) Sleeve type couplings shall be Dresser Style 38, 138 or equal.

6.3.1.1 Ductile Iron Fittings

A. Pipe fittings shall be ductile iron with pressure rating of 350 psi for 24-in and smaller piping and 250 psi for 30-in and larger piping. Fittings shall meet the requirements of AWWA C110 or AWWA C153 as applicable. Fittings shall have the same pressure rating, as a minimum, of the connecting pipe.

B. Closures shall be made with mechanical joint ductile iron solid sleeves and shall be located in straight runs of pipe at minimum cover outside the limits of restrained joint sections. Location of closures shall be subject to approval of the Town.

C. Mechanical joint fittings in sizes 4” through 24” shall meet the requirements of AWWA C153. Fitting shall be manufactured from a high strength, impact resistant ductile iron, having a minimum tensile of 70,000 psi with a minimum yield of 50,000 psi and a minimum elongation of 5%. Fitting wall thickness shall be CL 54 through 23” diameters and CL 56 through 24” diameters. Fittings shall be rated at 350 psi. Cement lining – all accessories, glands, bolts, and gaskets shall conform to ANSI A221.11 AWWA C111. Fitting shall be listed with Underwriters Laboratories. All fittings must be manufactured domestically. Where fittings are to be used with PVC piping systems, appropriate gaskets shall be furnished if required. Tees shall be used for lateral connections. Fittings shall be as manufactured by Griffin Pipe Products Co. or approved equal.

6.3.1.2 Ductile Iron Pipe and Fitting Interior Lining

A. Hydrogen sulfide resistant linings shall be utilized in all pipe and fittings. These linings shall be one of the following:

(1) Protecto 401 ceramic-filled amine cured epoxy lining shall be as manufactured by Indurall. The lining thickness shall be 40 mils minimum. Application shall be performed by an applicator approved by the coating manufacturer, in accordance with manufacturer's instructions and under controlled conditions at the applicator's shop or the pipe manufacturer's plant. Applicator shall submit a certified affidavit of compliance with manufacturer's instructions and requirements specified herein.

(2) TNEMAC SERIES 431 | PERMA-SHIELD PL as manufacture’s by TNEMAC. 100% solids, abrasion-resistant lining specifically designed for wastewater immersion and fume environments. Provides low permeation to H2S gas, protects against MIC and provides chemical resistance to steel, ductile iron pipe and fittings for severe wastewater. A coal-tar free, resin-rich formulation with low pigment volume concentration (PVC) for maximum performance. Color -5024 Sewer Pipe Green. Applied to manufactures specifications by a certified applicator minimum 40 mil thickness.

(3) Polyethylene lining shall consist of a blend of polyethylene powders applied to the interior of a preheated pipe. The nominal lining film thickness shall be 40 mils minimum. Polyethylene lining of ductile iron pipe shall be done at pipe manufacturer's plant; fittings shall be done at pipe manufacturer's plant, or at

experienced shop approved by the pipe manufacturer. Applicator shall submit a certified affidavit of compliance with manufacturer's instructions and requirements specified herein.

6.3.1.3 Ductile Iron Pipe and Fitting Exterior Coating

A. Buried pipe in corrosive soils shall be installed with a bituminous coating in accordance with AWWA C151 and C110 respectively.

B. Buried pipe shall be installed with polyethylene encasement conforming to AWWA C105, where indicated on the Drawings or as directed by the Town. The polyethylene sheet shall be 8 mils thick minimum.

C. Buried sleeve-type couplings shall have a protective wrapping of "Denso" material by DENSO Inc. of Texas or equal. Where "Denso" material is used, the joint shall be packed up with "Densyl mastic" to give an even contour for wrapping with "Densopol" tape. A 1.5 mm thick coating of "Denso" paste shall be applied following by 100 mm or more wide "Densopol" tape wound spirally round the joint with at least 50 percent overlap.

6.3.1.4 Air Release Valves

A. The valves shall be designed for sewage service and shall be non-clogging with cast iron body, bronze trim and stainless steel floats. Valves shall be provided with shutoff valve, blow-off valve, and quick disconnect hose connection and backflushing hose and valve.

B. Sewage air and vacuum valves shall be Val-Matic VM801, VM802, or approved equivalent.

C. Air release valves shall be installed on a full size (DxDxD) main line tee with a restrained flat top plug on the branch. The plug shall be threaded with 2-inch NPT.

D. Air release valves shall be provided with a full ported stainless steel ball valve with a pressure rating equal to or greater than that of the force main.

E. All piping between the flat top plug and the air valve shall be schedule 80 316 stainless steel.

F. Valve chamber shall be standard precast concrete manhole construction in accordance with ASTM C-478, lined with PVC or HDPE or epoxy coated, and shall be of adequate size to permit entry around valve for servicing and maintenance. Manhole base shall be provided with drain. Manhole cover shall be adequately vented to ensure discharge or intake of free air.

6.3.1.5 Plug Valves

A. Plug valves shall be of the non-lubricated, eccentric plug type, resilient seated, as manufactured by Dezurik or approved equal. Minimum open area through the valve shall be equal to or greater than 80%. Valves shall be designed for use with a working pressure of at least 150 psi and shall provide a drip-tight shutoff. Valves shall be manufactured using the following materials for construction:

Valve body – ASTM Class B Cast Iron

Seat – Nickel

Plug facing – Neoprene

Bearings – Stainless Steel

Packing – Nitrile-butadiene

B. Valves shall have a ¼ turn extension stems operator and flat face 150# flanged ends in accordance with ANSI standards or geared operator. Valves 4” and larger shall be

furnished with mechanical joint connections, conforming to ANSI B16.1 call 125 drilled flanges, and valves less than 4” shall be furnished with flanged or threaded true union connections. End connections shall be as required for compatibility with the pipes to which they are installed.

6.3.1.6 Valve Boxes

A. Valve Boxes shall be screw-type of cast iron and shall be installed over all buried valves and service line cleanouts in accordance with AWWA C500-80. Valve boxes shall have the word SEWER cast in the center of the cover. Valve boxes shall not be located in roadways or driveways without prior approval from the Town. Valve boxes for valves 4” through 12” shall be manufactured of cast iron. They shall have a minimum wall thickness of ¼”. The clear shaft opening shall be not less than 5 ¼”. Valve boxes shall be screw type adjustable as manufactured by Bingham & Taylor or approved equal.

B. Roadway valve boxes 1 ½” through 3” the clear shaft opening shall not be less than 4 1/2'”. Lids shall be drop type, adjustable from 24x36 or 36x48 as required. When greater depths are encountered the use of middle piece extensions shall be required. Boxes shall be of the two piece design, with a round bottom. All pieces shall have a protective coating of coal tar epoxy. Valve boxes shall be screw type adjustable as manufactured by Bingham & Taylor or approved equal.

6.3.2. HDPE Pipe

6.3.2.1 PIPE

A. HDPE shall made from PE 4710 high density polyethylene meeting ASTM D3350 cell classification 445574C (formerly PE 3408 meeting 345464C per ASTM D3350-02) and shall be listed in the name of the pipe and fitting Manufacturer in PPI (Plastics Pipe Institute) TR-4 with a standard grade HDB rating of 1600 psi at 73°F. Polyethylene pipe shall be manufactured in accordance with AWWA C901 for sizes 1-1/4” thru 3” IPS diameters and to the requirements of ASTM D3035. Pipe 4”IPS and DIPS sizes 4” and above shall be manufactured to the requirements of ASTM F714 and AWWA C906.

B. The pipe shall have a minimum pressure class of PC 200 with an outside diameter based dimension ratio (DR) of 9 at 73.4 degrees F. and shall meet the maximum design operational pressure plus a factor of safety. Pipe shall be manufactured by an ISO 9001 certified manufacturer.

C. The pipe shall be homogeneous throughout and free of visible cracks, holes, foreign inclusions, voids, or other injurious defects. All pipe shall be marked with the manufacturer's name or trademark, size, material code, pressure class, and AWWA designation number.

D. PE fittings shall meet the requirements of AWWA C901 and be of the same (or higher) pressure rating as the pipe line.

E. The manufacturer must certify that the fittings are capable of restraining PE pipe or tubing from pullout at the design pressure.

F. BUTT FUSION FITTINGS: Molded butt fusion fittings shall be in accordance with ASTM D 3261 and shall be manufactured by injection molding, a combination of extrusion and machining, or fabricated from HDPE pipe conforming to this specification. All fittings shall be pressure rated to provide a working pressure rating no less than that of the pipe. Fabricated fittings shall be manufactured using a McElroy Datalogger to record fusion pressure and temperature. A graphic representation of the temperature and pressure data for all fusion joints made

producing fittings shall be maintained as part of the quality control. The fitting shall be homogeneous throughout and free of visible cracks, holes, foreign inclusions, voids, or other injurious defects.

G. ELECTROFUSION FITTINGS: Electrofusion Fittings shall be PE3608 HDPE, minimum cell classification of 345464C as determined by ASTM D 3350 and be the same base resin as the pipe. Electrofusion Fittings shall have a manufacturing standard of ASTM F1055.

H. FLANGED AND MECHANICAL JOINT ADAPTERS: Flanged and Mechanical Joint Adapters shall be PE 3608 HDPE, Cell Classification of 345464C as determined by ASTM D 3350 and be the same base resin as the pipe. Flanged and mechanical joint adapters shall have a manufacturing standard of ASTM D 3261. All adapters shall be pressure rated to provide a working pressure rating no less than that of the pipe.

I. MECHANICAL RESTRAINT: Mechanical restraint for HDPE may be provided by mechanical means separate from the mechanical joint gasket sealing gland. The restrainer shall provide wide, supportive contact around the full circumference of the pipe and be equal to the listed widths. Means of restraint shall be machined serrations on the inside surface of the restrainer equal to or greater than the listed serrations per inch and width. Loading of the restrainer shall be by a ductile iron follower that provides even circumferential loading over the entire restrainer. Design shall be such that restraint shall be increased with increases in line pressure. Serrated restrainer shall be ductile iron ASTM A 536 with a ductile iron follower; bolts and nuts shall be corrosive resistant, high strength alloy steel. The restrainer shall have a pressure rating of, or equal to that of the pipe on which it is used or 150 PSI which ever is lesser. Restrainers shall be JCM Industries, Sur-Grip or pre-approved equal. Pipe stiffeners shall be used in conjunction with restrainers. The pipe stiffeners shall be designed to support the interior wall of the HDPE. The stiffeners shall support the pipe's end and control the "necking down" reaction to the pressure applied during normal installation. The pipe stiffeners shall be formed of 304 or 316 stainless steel to the HDPE manufacturers published average inside diameter of the specific size and DR of the HDPE. Stiffeners shall be by JCM Industries or pre-approved equal.

6.4. INSTALLATION

6.4.1. General

Ductile iron pipe shall be installed in accordance with AWWA C600. HDPE shall be installed in accordance with AWWA M55. The pipe and fitting manufacturer shall provide installation service training and / or information to insure proper installation.

6.4.2. Excavation

A. The trench shall be excavated to a depth of six inches below the outside diameter of the pipe barrel, or deeper if so specified. The width of the trench shall be as shown on the detail drawings. All of this excavation may be done by machine. The resultant subgrade shall be undisturbed, or if disturbed, compacted as approved by the Town.

B. When the pipe is to be laid in fill, bring fill to 2-feet above the elevation of the top of the pipe before excavation begins. The fill shall be compacted to 95% of maximum Proctor density as determined by ASTM D1557 or AASHTO T-180, Modified D (Modified Proctor).

6.4.3. Bedding.

A. The pipe shall be bedded on six (6) inches of AASHTO No. 7 stone, the full width of the trench, and shall be covered with AASHTO No. 7 stone to a height of 12" over the top of the pipe.

B. The bedding shall be thoroughly compacted. The bedding shall provide uniform and continuous bearing and support for the pipe at every point between the pipe joints.

C. Unstable Subgrade.

Where the bottom of the trench at subgrade is found to be unstable or to include ashes, cinders, any type of refuse, vegetable, or other organic material, or large pieces or fragments of inorganic material, which, in the opinion of the Town, should be removed such unsuitable material shall be removed to the width and depth recommended by the Town. Before pipe is laid, the subgrade shall be formed by backfilling with AASHTO No. 7 stone in 3-inch (uncompacted thickness) layers thoroughly compacted to 95% of maximum Proctor density and the bedding prepared as hereinbefore specified.

D. Special Foundations

Where the bottom of the trench at the subgrade is found to consist of material which is unstable to such a degree that, in the opinion of the Town, it cannot be removed and replaced with an approved material thoroughly compacted in place to support the pipe properly, the applicant shall submit plans and descriptions, for the Town's approval, of an alternative method of stabilizing the foundation for the pipes.

6.4.4. Pipe.

A. General.

All pipes shall be laid and maintained to the required lines and grades with fittings and valves at the required locations; spigots centered in bells; and all valves plumb. Pipe laying shall commence at the lowest point and proceed upgrade.

B. Construction Control.

During the installation of a force main, the pipe shall be laid at a horizontal or positive grade to each high point, air release manhole, or point of discharge, as indicated on the Drawings. The Contractor shall provide sufficient construction control to assure that there are no sags or loss in grade in the force main which could tend to accumulate air.

C. Depth of Pipe.

All force main pipe shall be laid to a minimum depth of 3'-6" from grade to the crown of pipe.

D. Permissible Deflection at Joints.

If deflection is required, the amount of deflection shall not exceed the maximum limits as specified in the AWWA Standard C600, or these specified by the pipe manufacturer.

6.4.5. Fittings and Valves

A. General.

Valves and fittings shall be set and jointed to pipe in the manner specified previously for cleaning, laying and jointing pipe.

B. Valve Chamber.

Provide a PVC or HDPE lined precast concrete manhole for every air release and vacuum valve meeting the requirements for manholes as specified in SECTION 5 -

MANHOLES. The manholes shall be constructed of sufficient size to permit entry for valve repairs and afford protection to the valve and pipe from impact where they pass through the manhole walls. All valves and fittings shall be supported as indicated on the detail drawings.

6.4.6. Anchorage.

Anchorage of pipe and fittings shall be provided at all tees, crosses, bends, wyes, pipe ends, or at other locations that have unbalanced pressure forces. Anchorage shall be provided by restraints and thrust blocks:

A. Pipe manufacturer's restrained joint system as approved by the Town.

(1) Provide computations for the embedment lengths required for the following minimum conditions:

Design pressure = 150 psi

Depth of cover = 3.5 feet

Safety factor = 1.5

Soil type = cohesive granular

Soil internal friction angle = 20 degrees

Soil cohesion = 200 psf

Soil density = 90 pcf

Ref. - "Thrust Restraint for Ductile Iron Pipe", DIPRA

(2) Minimum restrained lengths required for pipe anchorage with restrained joints is detailed on Detail 20

B. Metal harness or tie rods

(1) Metal harness or tie rods of adequate strength to prevent movement shall be used.

(2) Restrained pipe length shall be the same as those for restrained joints.

(3) Steel rods or clamps shall be type 304 stainless steel. The minimum number shall be as follows:

(a) Use a minimum of two ¾-inch diameter rods for pipes 6-inches and smaller

(b) Use a minimum of four 1-inch diameter rods for pipes 8-inches through 14-inches

(c) Mega-Lug retainer glands shall be utilized for securing anchor rods to the pipe. Duc-lugs shall not be utilized.

(d) Minimum restrained length required for pipe anchorage with metal harness and tie rods shall be the same as those indicated for restrained joint pipe.

C. Concrete thrust blocks

(1) Concrete anchor blocks shall be designed for the same parameters as those for restrained joints with the additional condition:

(2) Minimum allowable soil bearing pressure = 2000 psf

(3) Minimum anchor blocks shall be as detailed on Details 21.

(4) Wrap pipe and appertances in contact with concrete with polyethylene film.

6.4.7. Backfilling.

A. The trench may be filled with excavated material above the AASHTO No. 7 stone as specified above except that stones larger than eight (8) inches may not go in the trench and the fill shall not contain more than 20% stone in total volume.

B. The trench shall be properly tamped in lifts not to exceed the maximum thickness for the type of tamping equipment being used. If the trench is in an existing street, the surface is to be restored as required by the regulating Town.

C. All bedding and backfill shall be compacted to 95% of modified Proctor density.

D. Backfilling shall not be done with frozen material. No backfilling shall be done if the material already in the trench is frozen.

E. In State highways all backfill shall be in accordance with the requirements MD SHA.

6.4.8. Surface Restoration.

A. In State highways surface restoration shall be in accordance with MD SHA Standard Specifications for Construction and Materials Section 500, or as specified in the MD SHA Permit issued for the subject project.

B. In County roads, Town Roads, paved areas or other traffic areas surface restoration shall be in accordance with Washington County Roads Department and Town Street Standards.

6.5. TESTING AND INSPECTION

6.5.1. Pressure Test.

A. General

(1) After the pipe has been laid and backfilled as specified, all newly laid pipe shall be subjected to a hydrostatic pressure of 150 pounds per square inch, or 150% of the normal working pressure, whichever is greater in accordance with AWWA C-600 or AWWA M55 as applicable.

(2) Where any section of a force main is provided with concrete reaction backing, the hydrostatic pressure test shall not be made until at least five days have elapsed after the concrete reaction backing was installed. If high early strength cement is used in the concrete reaction backing, the hydrostatic pressure test shall not be made until at least two days have elapsed.

(3) Air release valves shall be installed but isolated during testing of the pipeline.

B. Duration of Pressure Tests.

(1) The duration of each pressure test shall be two hours or as determined by the Town.

C. Procedure.

(1) Each section of pipe shall be slowly filled with water and the specified test pressure, based on the elevation of the lowest point of the line or section under test and corrected to the elevation of the test gauge, shall be applied by means of a pump connected to the pipe in a manner satisfactory to the Town. The pump, pipe connections, and all necessary apparatus, including gauges, shall be furnished by the Applicant and are subject to approval by the Town. The Applicant will make all taps into the pipe, and furnish all necessary assistance for conducting the tests. The Applicant shall supply either a container calibrated in 0.1 gallon increments or a laboratory certified calibrated water meter calibrated to an accuracy of 0.1 gallons.

(2) Expelling Air Before Test.

Before applying the specified test pressure, all air shall be expelled from the pipe. If permanent air vents are not located at all high points, the Applicant shall make the necessary taps at such points before the test is made. After the test has been

completed, the Applicant shall remove and plug the taps or leave them in place at the direction of the Town.

(3) Examination Under Pressure. Any cracks or defective pipes, fittings, or valves discovered in consequence of this pressure test, shall be removed and replaced by the Applicant, and the test shall be repeated.

(4) Leakage Test.

(a) A leakage test shall be conducted concurrently with the pressure test. The Applicant will furnish laboratory calibrated test gauge and measuring device and all necessary labor to conduct the test.

(b) Leakage is defined as the quantity of water that must be supplied into the newly laid pipe to maintain pressure within 5 psi of the specified test pressure after the pipe has been filled with water and the air expelled.

(c) No pipe will be accepted until the leakage is less than the number of gallons per hour as determined by the formula:

$$L = \frac{SD\sqrt{P}}{133{,}200}$$

Where:

L = testing allowance (makeup water), in gallons per hour

S = length of pipe tested, in feet

D = nominal diameter of the pipe, in inches

P = average test pressure during the hydrostatic test, in pounds per square inch (gauge)

HYDROSTATIC TESTING ALLOWANCE PER 1,000 FT OF PIPELINE* - gph
(AWWA C600)

Avg. Test Pressure *psi*	**Normal Pipe Diameter-*in.***										
	3	4	6	8	10	12	14	16	18	20	24
450	0.48	0.64	0.95	1.27	1.59	1.91	2.23	2.55	2.87	3.18	3.82
400	0.45	0.60	0.90	1.20	1.50	1.80	2.10	2.40	2.70	3.00	3.60
350	0.42	0.56	0.84	1.12	1.40	1.69	1.97	2.25	2.53	2.81	3.37
300	0.39	0.52	0.78	1.04	1.30	1.56	1.82	2.08	2.34	2.60	3.12
275	0.37	0.50	0.75	1.00	1.24	1.49	1.74	1.99	2.24	2.49	2.99
250	0.36	0.47	0.71	0.95	1.19	1.42	1.66	1.90	2.14	2.37	2.85
225	0.34	0.45	0.68	0.90	1.13	1.35	1.58	1.80	2.03	2.25	2.70
200	0.32	0.43	0.64	0.85	1.06	1.28	1.48	1.70	1.91	2.12	2.55
175	0.30	0.40	0.59	0.80	0.99	1.19	1.39	1.59	1.79	1.98	2.38
150	0.28	0.37	0.55	0.74	0.92	1.10	1.29	1.47	1.66	1.84	2.21
125	0.25	0.34	0.50	0.67	0.84	1.01	1.18	1.34	1.51	1.68	2.01
100	0.23	0.30	0.45	0.60	0.75	0.90	1.05	1.20	1.35	1.50	1.80

*If the pipeline under test contains sections of various diameters, the testing allowance will be the sum of the testing allowance for each size.

(d) When testing against closed valves, an additional leakage per closed valve of 0.0078 gallons per hour per inch of nominal valve size shall be allowed.

(e) The Town will record both the makeup water and pressure at one half hour intervals during the test period.

(f) Should any test of pipe laid disclose leakage greater than that specified above, the Applicant shall, at his expense, locate, repair, and replace the defective joints, pipe, or fittings until the leakage is within the specified allowance.

SECTION 7 - LOW PRESSURE SEWERS

7.1. GENERAL

A. Intention.

The use of low pressure sewers, which are located in public roads or improved rights-of-way, is intended to provide sewer service to existing properties which cannot be served by conventional gravity type sewers or common pumping stations and force mains or as dictated by Town programs, which delineate a special service area to be governed by a Town generated management plan. All must be accessible by at minimum and improved gravel access lane.

B. Approvals.

The Town will approve the use of low pressure sewers only under special circumstances. Where it is possible to install gravity-type sewers, or where it is feasible to utilize sewage pumping stations and force mains, the use of low pressure sewers will not be permitted.

C. Developers.

Developers, who wish to provide sewer service by using low pressure sewers within tracts to be developed, must familiarize themselves with all applicable management plans. Grinder pump systems will be used in low pressure sewer systems. The proposed use of grinder pumps and low pressure sewers will be reviewed on a case by- case basis.

7.2. DESIGN

A. Design.

It is incumbent upon the Applicant to provide full details of the proposed design of low pressure sewer systems for review by the Town.

B. Pipe Profile

Every attempt shall be made to construct low pressure sewers at a continuously rising grade to the point of discharge (high point). Where this is impossible and localized high points in the line (profile) are created, air release valve(s) must be installed.

C. Pumps.

Pumping units will be individual on-lot grinder pumps for residential applications and duplex grinder pump systems for commercial and industrial applications as per the building permit. All are subject to Town and Plumbing Inspector approval.

D. Cleanouts Manholes.

Provide cleanout manholes at all bends of 45-degrees or greater. The maximum distance between cleanout manholes shall be 500-600 feet.

E. The pressure sewer shall be color coded to distinguish between sanitary sewer and water main.

7.3. MATERIALS AND EQUIPMENT

7.3.1. Ductile Iron Pipe and Fittings.

A. Ductile Iron Pipe.

Ductile iron pipe shall conform to AWWA C151. Pipe shall be supplied in standard lengths as much as possible. Ductile iron pipe shall be by U.S. Pipe and Foundry Company, Griffin Pipe Products Co., or approved equal.

B. Thickness design shall be per AWWA C150, except provide minimum Class 52.

C. Ductile iron pipe and fittings for force mains shall be lined with series 431 perma-shield pl by Tnemec, Protecto 401 by Indurall, or approved equal. The lining thickness shall be 40 mils minimum. Application shall be performed by an applicator approved by the coating manufacturer, in accordance with manufacturer's instructions and under controlled conditions at the applicator's shop or the pipe manufacturer's plant. Applicator shall submit a certified affidavit of compliance with manufacturer's instructions and requirements specified herein.

D. Fittings.

(1) Fittings shall be ductile iron in accordance with the standard specification set forth in AWWA C110 or AWWA C153 as applicable. Fittings shall have the same pressure rating, as a minimum, of the connecting pipe.

(2) Closures shall be made with mechanical joint ductile iron solid sleeves and shall be located in straight runs of pipe at minimum cover outside the limits of restrained joint sections. Location of closures shall be subject to approval of the Town.

(3) Mechanical joint fittings in sizes 4” through 24” shall meet the requirements of AWWA C153. Fitting shall be manufactured from a high strength, impact resistant ductile iron, having a minimum tensile of 70,000 psi with a minimum yield of 50,000 psi and a minimum elongation of 5%. Fitting wall thickness shall be CL 54 through 23” diameters and CL 56 through 24” diameters. Fittings shall be rated at 350 psi. Cement lining – all accessories, glands, bolts, and gaskets shall conform to ANSI A221.11 AWWA C111. Fitting shall be listed with Underwriters Laboratories. All fittings must be manufactured domestically. Where fittings are to be used with PVC piping systems, appropriate gaskets shall be furnished if required. Tees shall be used for lateral connections. Fittings shall be as manufactured by Griffin Pipe Products Co. or approved equal.

E. Joints.

(1) Pipe joints shall be rubber-gasket push-on type or rubber-gasket mechanical joint type conforming to AWWA C111. Gasket shall be of SBR.

(2) Restrained joints shall be push-on restrained joints (U.S. Pipe and Foundry Co.’s. Field Lok 350 Gaskets or equal) as manufactured by the pipe supplier or manufacturer subject to the Town’s approval. The restraint provided shall be standard restrained joint or bolt-less, integral restraining system. Restrained joints shall be suitable for the specified test pressure. Mechanical joint retainer glands (“Megalug”) as manufactured by EBAA Iron Inc. of Texas can be selected for restraining the mechanical joint of ductile iron pipe for field closures or as approved by the Town. The minimum number of restrained joints required for resisting forces at fittings and changes in direction of pipe shall be determined from the length of restrained pipe on each side of fittings and changes in direction necessary to develop adequate resisting friction with the soil.

7.3.2. Polyvinyl Chloride Pipe.

A. Material.

(1) In main line and service line applications: PVC molecular oriented pressure pipe sized 4 through 12-in shall conform to the requirements of AWWA C909. All pipe shall be Class 150 with a Dimension Ratio of 21 (SDR 21). The pipe shall be PVC 1120 made from PVC compounds Class 12454-A or 12454-B as defined in ASTM D1784. Each pipe length shall be marked with the manufacturer's name or trademark, size, material code, pressure class, and AWWA designation number.

(2) PVC pipe shall meet the performance requirements standard specification for PVC pressure treated pipe (SDR series). PVC pipe shall also conform to the following standards: ASTM F1483, ASTM D2774, and NSF Standard No. 61.

(3) Within valve and blow-off chambers: PVC pressure pipe shall be Schedule 80 PVC conforming to the requirements of ASTM D-1784 and ASTM D- 1785.

(4) PVCO pressure pipe shall be rated for 150 psi with a safety factor of 4 to 1 and shall have a minimum hydrostatic design basis (HDB) of 1700 psi. PVCO in sizes 6” through 12” shall have outside diameter of ductile iron pipe, and shall require no special repair material, other than what is currently being utilized.

(5) Pipe shall be as manufactured by North American Pipe Corporation or approved equal.

(6) PVC pressure pipe shall be manufactured to steel pipe size (IPS) outside dimensions with DR’s tolerances in compliance with ASTM D2241 PVC plastic pipe, DR, and PR. Pipe shall be manufactured to steel pipe O.D.’s (IPS) in size 1 ½” through 4”.

(7) Pressure ratings and class shall be as indicated on drawings. If drawings do not show class, the highest class shall be required. Pipe shall have a 2 to 1 safety factor with SDR 21 and CL 200. When used for potable water systems, pipe shall bear the N.S.F. seal.

(8) Certificates of compliance of the above specifications shall be required from the manufacturer before acceptance of delivery or award of contract.

B. Fittings

PVC fittings shall meet the requirements of AWWA C909 and be of the same (or higher) pressure rating as the pipe line. PVC gasketed pressure fittings in size 1 ½” through 4” shall be manufactured of PVC compounds meeting ASTM D1784. Fittings shall be one piece injection molded in sizes available. When certain sizes are not available, factory fabricated pressure fittings shall be acceptable. Bells shall be gasketed joint, conforming to ASTM D3139, with gaskets conforming to ASTM F477. Fittings shall be N.S.F. approved. All fittings shall have a working pressure of 200 psi. All fittings shall be compatible with PVC pipe, having an O.D. of steel pipe. Fittings shall be as manufactured by the Harrington Corporation or approved equal.

C. Joints

(1) Pipe joints shall be of the rubber gasket type with a grooved premolded coupling bell or sleeve. Pipe shall be joined by means of a rubber ring bell joint, which shall be an integral and homogeneous part of the pipe. Pipe joints shall conform to ASTM D3139 and UNI-B-1 standards.

(2) Within valve and blowoff chambers: pipe joints shall be solvent welded as recommended by pipe manufacturer or fitted with a restrained joints system.

7.3.3. Polyethylene (PE) Pressure Pipe.

A. Material.

(1) In main line and service line applications polyethylene pipe shall conform to AWWA C901, Standard for Polyethylene (PE) Pressure Pipe and Tubing, ½ In. through 3 In. for Water Service, of latest revision.

(2) All pipe shall be manufactured with a material specified in ASTM D 3350 by a cell classification of 345434C with an AWWA C901 standard PE Code of 3408.

(3) The pipe shall have a pressure class of PC 200 with an outside diameter based dimension ratio (DR) of 9 at 73.4 degrees F.

(4) The manufacturer shall furnish a certified affidavit attesting that all products delivered comply with the requirements of AWWA C901.

(5) All pipe shall be marked with the manufacturer's name or trademark, size, material code, pressure class, and AWWA designation number.

B. PE fittings shall meet the requirements of AWWA C901 and be of the same (or higher) pressure rating as the pipe line. The manufacturer must certify that the fittings are capable of restraining PE pipe or tubing from pullout at the design pressure.

C. Pipe joints shall be of the compression type utilizing a totally confined grip seal and coupling nut. Stainless steel tube stiffener insert shall be used that does not extend beyond the clamp or coupling nut.

D. The pipe and fitting manufacturer shall provide installation service training and / or information to insure proper installation.

7.3.4. Air Release Valves.

A. All valves under this section shall be designed for used with sewage force mains. The valves shall be designed to keep the valve operating mechanisms free from contact with the sewage. The valve body and cover shall be constructed of ASTM A126 Class B cast iron. The float, plug, guide shafts, and bushings shall be constructed of Type 316 stainless steel. Resilient seats shall be Buna-N. All valves, to be furnished with accessories for back flushing. Valves shall be VM801 or VM802 sewage air and vacuum valve as manufactured by Val-Matic Corporation or approved equal.

B. Valve chambers shall be minimum of 4 feet in diameter with valves offset to one side for easy access and shall be of standard precast concrete manhole construction in accordance with ASTM C-478. Manhole base shall be provided with a drain. The manhole cover shall be adequately vented to ensure discharge or intake of free air or a separate air vent pipe provided.

7.3.5. Cleanout Connections.

A. Cleanout connection appurtenances shall be constructed of PE DR 9, SCH 80 PVC, Stainless Steel or ceramic coated ductile iron material and shall be provided with shut-off valves on both sides of the tee and a valve on the discharge branch of the tee to permit blow off from either direction. The outlet shall have a threaded end with screwed removable cap or quick connect with cap. The transition from iron fittings to PVC material shall be made by use of approved methods recommended by the manufacturers of the products.

B. The transition from PE DR 9 pipe to Schedule 80 PVC pipe, if utilized, shall be made by use of adapters, located outside the cleanout chamber, as recommended by the manufacturers of the products.

C. A 5’ diameter manhole shall be provided as the chamber to house the valving assembly. See detail.

7.3.6. Valves.

Ball or plug valves shall be installed on services, low pressure and force main lines. Valves installed in valve/cleanout pits shall be actuated with a quarter turn type hand lever. Buried valves shall be actuated with an underground actuator through a valve box. Valves shall have the same or greater pressure rating as the attached pipe.

7.3.7. Valve Boxes.

A. Valve Boxes shall be screw-type of cast iron and shall be installed over all buried valves and service line cleanouts in accordance with AWWA C500-80. Valve boxes shall have the word SEWER cast in the center of the cover. Valve boxes shall not be located in roadways or driveways.

B. Roadway valve boxes 1 ½" through 3" the clear shaft opening shall not be less than 4 1/2". Lids shall be drop type, adjustable from 24x36 or 36x48 as required. When greater depths are encountered the use of middle piece extensions shall be required. Boxes shall be of the two piece design, with a round bottom. All pieces shall have a protective coating of coal tar epoxy. Valve boxes shall be screw type adjustable as manufactured by Bingham & Taylor or approved equal.

7.3.8. Detectable Warning Tape and Tracer Wire.

Following installation and backfill of the pressure pipe, two (2) rows detectable warning tape shall be installed at the top of the trench not more than 12-inches below finished grade. Detectable warning tape shall be polyethylene film encasing a metallic core, minimum 6 inches wide and 4 mils thick, color-coded green for sewer, bearing in black letters, the continuous legend - CAUTION - PRESSURE MAIN BURIED BELOW, or approved equal. Composition of detectable tape shall consist of 0.50 mil thick solid core encased in a reinforced protective plastic jacket that is resistant to alkalis, acids, and other destructive elements commonly found in soil. Min 8 AWG jacketed tracer wire shall also be installed above the plastic pipe with the marking tape.

7.4. INSTALLATION

7.4.1. Excavation.

A. The pipe shall be laid at the minimum depth as specified in paragraph 3 hereunder. The trench shall be excavated to six inches below the outside diameter of the pipe barrel, or deeper if so specified. The width of the trench shall be as shown on the detail drawings. All of this excavation may be done by machine. The resultant subgrade shall be undisturbed, or compacted as approved by the Town if disturbed.

B. When the pipe is to be laid in fill, bring the fill to two feet above the elevation of the top of pipe to be laid before excavation commences. Compact fill to 95% of the maximum density as determined by ASTM D1557-70 or AASHTO T-180, Method D (Modified Proctor). The bottom of the trench shall be compacted to 95% of maximum Proctor density prior to installation of the pipe bedding.

7.4.2. Bedding.

A. The DI or PVC pipe shall be bedded on six inches of AASHTO No.7, the full width of the trench, and shall be covered with AASHTO No. 7 stone to a height of 12- inch over the top of the pipe. PE pipe shall be bedded and backfilled to 12-inches above the pipe with AASHTO No. 7 aggregate per ASTM D2774.

B. The bedding shall be thoroughly compacted. The bedding shall provide uniform and continuous bearing and support for the pipe at every point between the bells.

C. Unstable Subgrade.

Where the bottom of the trench at subgrade is found to be unstable or to include ashes, cinders, any type of refuse, vegetable, or other organic material, or large pieces or fragments of inorganic material, which, in the opinion of the Town, should be removed, the Developer shall excavate and remove such unsuitable material to the width and depth recommended by the Town. Before pipe is laid, the subgrade shall be formed by backfilling with AASHTO No. 7 stone in 3-inch (uncompacted thickness) layers thoroughly compacted to 95% of maximum Proctor density and the bedding prepared as hereinbefore specified.

D. Special Foundations.

Where the bottom of the trench at the subgrade is found to consist of material which is unstable to such a degree that, in the opinion of the Town, it cannot be removed and replaced with an approved material thoroughly compacted in place to support the pipe properly, the applicant shall submit plans and descriptions, for the Town’s approval, of an alternative method of stabilizing the foundation for the pipes.

7.4.3. Laying Pipe.

A. All pipe shall be laid to a depth of a minimum of 4 feet-6 inches from grade to the crown of pipe. All pipe shall be laid and maintained to the required lines and grades with fittings and valves at the required locations; spigots centered in bells; and all valves plumb. The pipe shall be laid in the backfill materials as specified.

B. The interior of each pipe shall be cleaned of all excess joint and foreign material before the next pipe is laid. At the close of each day's work, and at such other times when pipe is not being laid, the open end of the pipe shall be protected with a close fitting stopper.

7.4.4. Backfilling.

A. The trench may be filled with excavated material above the AASHTO No. 7 (from 12-inches above the top of the pipe to restoration depth) as specified above except that stones larger than eight (8) inches may not go in the trench and the fill shall not contain more than 20% stone in total volume.

B. The trench shall be properly tamped in lifts not to exceed the maximum thickness for the type of tamping equipment being used. If the trench is in an existing street right-of-way, backfill and surface restoration shall be performed in accordance with the requirements of the regulating Town.

C. All bedding and backfill shall be compacted to 95% of maximum Proctor density.

D. Backfilling shall not be done with frozen material. No backfilling shall be done if the material already in the trench is frozen.

E. In State road rights-of-way all backfill shall be in accordance with the requirements of MD SHA. The requirement for back filling in other streets shall be as required by the municipality in which the street is located.

F. Install detectable warning tape directly above pipeline, no more than12-inches below finished grade.

7.4.5. Surface Restoration.

A. In State highways surface restoration shall be in accordance with MD SHA Standard Specifications for Construction and Materials Section 500, or as specified in the MD SHA Permit issued for the subject project.

B. In County roads, Town Roads, paved areas or other traffic areas surface restoration shall be in accordance with Town or Washington County Roads Department Standards.

7.5. TESTING AND INSPECTION

7.5.1. Pressure Test.

After the pipe has been laid and backfilled as specified, all newly laid pipe shall be subjected to a hydrostatic pressure for one hour of 50 pounds per square inch (psi), or 150% of the normal working pressure, whichever is greater. If the pressure drops less than 5 psi within a period of 30 minutes the test shall be deemed to be successful.

7.5.2. Inspection.

Pipelines shall be visually inspected, prior to commencement of backfilling, for alignment, depth, slope, and for fittings and pipe material used. It is incumbent upon the Applicant to notify the Town when the work is ready for inspection.

SECTION 8 - PUMPING STATIONS

8.1. GENERAL

8.1.1. State Requirements.

Sewage pumping stations shall be properly designed to conform to all applicable regulations of the Maryland Department of Environment, OSHA, and the Maryland Department of Labor, Licensing, & Regulation. Prior to acceptance by the Town, detailed construction drawings and specifications, as well as the design calculations, must be submitted for review and approval.

8.1.2. Pumping Station Types.

A. The standard sewage pumping station shall be based on Gorman-Rupp self-priming suction lift pumps, taking flow from a concrete wet well, combined with an end of pipe comminutor, and a diesel powered emergency electrical generator with transfer switch. All above ground facilities shall be enclosed in a permanent masonry building.

B. Both wet well/drywell and submersible type stations will be considered for unique conditions that cannot be adequately addressed by the standard suction lift pumping station. These requirements pertain to pumping stations that will serve multiple and/or industrial or other developments that discharge sewage by gravity to the pump station site. They do not apply to individual effluent or sewage pumps in lowpressure systems.

C. Pumping stations using submersible pumps will be limited in size by flow and head conditions. As a guide for design purposes, if the Total Head in feet, multiplied by the Flow in gallons per minute, is greater than 30,000 then a walk-down concrete wet well/drywell station may be required. Future flow conditions will be included when determining the type of pumping station required. The type of pumping station is subject to the approval of the Town.

8.1.3. Permits.

The Applicant shall secure, in the name of the Town, all permits that are required in the name of the Town such as those from MDE and MD SHA. The Applicant shall secure, in his own name, all required construction permits such as local street opening permits. Any existing street, highway, or other improvements disturbed during construction shall be restored to the satisfaction of the appropriate municipality or Owner before the facilities will be accepted for final acceptance by the Town. All costs of such permits, including any and all bonds required, shall be the sole expense of the Applicant.

8.1.4. Environmental Class.

Special consideration must be given to the fact that wet wells, other than those in residential properties, are considered a hazardous Class 1, Group D environment.

8.1.5. Safety Requirements.

All gears, chains, coupling, projecting set screws, keys and similar rotating or reciprocating parts shall be protected in accordance with American Standards Association Safety Code for Mechanical Power-Transmission Apparatus 815-1927.

8.1.6. Drawings and Details.

The Applicant shall furnish the Town detailed plans and instructions for installation and operation of the pumps, detailed drawings showing the specific piping arrangement required for the proposed pumping station, and two copies of the characteristic performance curves for each proposed pump. The drawings will be examined only for general design, general dimensions and apparent suitability and will be approved or returned for the changes required. Such approval will not relieve the Applicant of the responsibility for furnishing equipment which will satisfactorily perform under the conditions specified.

8.1.7 Flow Requirement.

Pump stations shall not be taken over by the Department until the daily flow of 5,000 GPD for the average monthly flow has been met.

8.1.8. Bypass connection.

A bypass connection shall be provided for all Pump station sites. See Detail

8.1.9. Odor Control

Aeration and/or odor control is required, and aeration shall occur when the pumps are off to avoid cavitation.

8.2. DESIGN

8.2.1. Site.

A. The pumping station site shall be properly graded to eliminate any storm water problems and/or ponding conditions. After grading, the site shall be seeded and landscaped. Provisions shall be made to include shrubbery in the landscaping to enhance the appearance of the station as determined by the Town of Boonsboro Zoning Ordinance & Town Charter. The Applicant is responsible for obtaining a good stand of grass until the time of first cutting.

B. The site shall be of sufficient size to accommodate the pumping facilities and to permit necessary heavy vehicular access for maintenance of the equipment and facilities as well as the turn-around of service vehicles. The minimum size shall be as determined by the Town of Boonsboro Zoning Ordinance & Town Charter. Depending upon the locality, topography and pumping station type, a larger area, as determined by the Town may be required.

8.2.2. Access Road and Turn-around.

A. The access road and turn-around at the pumping station shall have a paved surface. The minimum width of the paved surface of the access road shall be 12 feet and the access road and turn-around shall be constructed to the following minimum requirements:

   Formed, shaped and compacted subgrade.

   Compacted graded aggregate base -- 6" thick.

   Hot mix asphalt base - Superpave 12.5 mm -- 1-1/2" thick.

   Hot mix asphalt surface - Superpave 9.0 mm -- 1" thick.

   Toe drains and stormwater culverts as dictated by topography

B. The paved area within the fenced area must be large enough and be designed to allow the turn-around of an AASHTO standard Single Unit Utility Vehicle with a wheelbase of 20 feet and width of 8 feet 6 inches.

8.2.3. Fencing.

A. The site shall be fenced with a 6'-0" high, barbed wire topped, polyvinyl chloride (PVC) coated chain link fence with single or double swing gate vehicle access gate and a man access gate. The man-gate may be integral with the swing gate or may be a separate gate.

B. The chain link fabric shall conform to Federal Specification RR-F-191/1D. The chain link fabric shall be Type 1. The fabric shall be 9 gauge core wire and galvanized all conforming to ASTM A641, woven after PVC coating in a 2-inch mesh. Top and bottom selvages shall have a twisted barbed finish, barbs to be formed by cutting wire on a bias. Fabric to be attached to intermediate posts with No. 6 aluminum fabric wire spaced approximately 15-inches apart and to the top rail with 9 gauge wires spaced approximately 18-inches apart. The fabric shall be fastened to all terminal and gate posts with 1.4-inch by ¾ inch stretcher bars with No. 11 gauge pressed steel bands spaced approximately 12-inches apart. All bands, wires and tension bars shall conform to Federal Specification RR-F-191/4D.

C. Posts, rails, and braces shall conform to Federal Specification RR-F-191/3D and be fabricated of Class I (round steel sections), Grade A (hot dipped galvanized), seamless steel pipe, in accordance with ASTM A53 (Schedule 40), PVC coated to match fabric and be of the following sizes:

   (1) Corner and terminal posts: SP3 (2.375-inch o.d.)

   (2) Line posts: SP2 (1.900-inch o.d.)

   (3) Gate posts: SP5 (4.000-inch o.d.)

   (4) Rails and braces: SP1 (1.66-inch o.d.)

   (5) Spacing of posts shall not exceed 10-feet.

D. Gate and hardware shall conform to Federal Specification RR-F-191/2D. Gate shall be constructed of Class I, Grade A seamless steel pipe, size SP1, plus additional intermediate members when required and meeting the requirements of RR-F-191/3D. Gate frame shall be of welded construction or shall be assembled using fittings. When fittings are used, the frame shall be fitted with 3/8-inch minimum diameter adjustable length truss rods, meeting the requirements of Federal Specification RRF-191/4D. When the frame is welded, all welding shall be done prior to galvanizing and application of PVC coating. Gate fabric shall be the same as for the fence. Install fabric with stretcher bars attached to gate frame at not more than 12-inches o.c. Extend end members 1-foot above the top horizontal member of the gate frame and

attach three strands of barged wire, uniformly spaced to end members with bands, clips or eyebolts.

E. Both gates shall be provided with hot-dipped galvanized hinges, latches, stops and keepers in accordance with ASTM A153 and PVC coated to match the chain link fabric. Hinges shall be pressed steel or malleable iron, non-lift-off type, and offset to permit 180-degree gate opening. Latch shall be forked type to permit operation from either side of the gate. Provide padlock eye as integral part of latch.

F. The PVC coating for the chain link fabric shall be Class 2a or 2b as defined by ASTM F668. Posts, rails, and appurtenances shall be PVC coated 10 to 14 mil thick by factory heating adhesive coated steel and melting powered PVC to the surfaces. Bolts and nuts shall be cleaned as required and field coated after installation with two coats minimum of an approved liquid PVC patching compound compatible with and of the same quality as all other PVC coatings.

G. Fence and gate(s) shall be topped with three strands of barbed wire consisting of two 12-1/2 gauge twisted line wires with 14 gauge round aluminium wire barbs having 4 points and spaced at 5-inches on center, with color to match fabric. Barbed wire support arms shall be single arm, for three strands of barbed wire and be at an angle of 45-degrees, with the top strand being 12-inches above and 12-inches out from the fence line.

H. Set all posts to a depth of 3-feet unless otherwise shown. After setting and plumbing the posts fill the holes with 2,500 psi concrete. Crown top of concrete to shed water.

8.2.4. Lighting:

The station itself and site shall be provided with lighting. LED lighting shall be used and a dusk to dawn outside motion activated lighting fixture shall be included.

8.2.5. Flow Metering.

A. A flow metering device which is capable of continuously recording pumped flows and displaying instantaneous flow rate and totalized flow shall be provided. Meter shall be a COPA-X, Series 10D14654, magnetic flowmeter by Bailer-Fischer & Porter Company. It shall have a polyurethane liner; ANSI 150, 304 stainless steel flanges and metering tube; 316 SST bullet nose type electrodes; Division 2, Hazardous Location, safety rating; operating on 120 V AC, 60 Hz power; 120 V AC, 60 Hz remote mounted electronics; occasional submergence enclosure; process temperature to 190° F; 4-20 mA DC output signal. Meter shall be factory calibrated with a copy of the report in the O & M manual. Meter grounding shall be in accordance with the manufactures recommendations. Meter shall be capable of running empty indefinitely without damage to any component.

B. A flow converter / transmitter shall be furnished with the meter. It shall operate on 120 V, 60 Hz power, have an isolated 4-20 mA output into a 0 to 1000 ohms; with a NEMA 4Xwall mount; connecting signal cable between flow meter and signal converter; and a seven digit, non-reset tantalizer on the face of the enclosure and a scalable pulse output to drive the totalizer with a multiplier power of 10.

8.2.6. Comminutors.

A. All pumping stations shall be provided with comminutors. The comminutor shall normally be mounted on the end of the wet well influent pipe and be equipped with an auto-coupling slide rail system allowing for removal to surface with no requirement to enter the wet well. The unit shall be manufactured by G.E. T. Industries, Inc., JWC Environmental, Inc., or Moyno, Inc. and shall be specifically designed for the proposed installation by the manufacturer. Any other comminutor makes and models are subject

to the approval of the Town. The unit shall be capable of passing the peak hour design flow without bypassing flow and have satisfactory operation under zero flow conditions. The unit shall be powered by a totally enclosed, non-vented, floodproof motor, suited for occasional total submergence. The rotating drum screen shall be cast ductile iron and the casing shall be cast iron with an A.S.A. 125 lb. standard flange for pipe mounting. The cutting elements shall be manufactured form A2 tool steel hardened to 56 Rockwell C57. The stationary cutter shall be reversible allowing for four sets of cutting edges prior to replacement. All fasteners, swing bolts and hinge pins shall be of stainless steel.

B. The auto-coupling slide rail system shall be manufactured with Type 316 stainless steel having a minimum diameter of 1.5-inches, extending from the lower operating position to the upper guide holed which shall be an integral part of the stainless steel access cover frame. It shall also incorporate an emergency bypass overflow pipe section ahead of the comminutor to allow flow to bypass to the wet well in the event of comminutor blockage. This unit shall be fabricated with Type 316 stainless steel. The comminutor access hatch shall be fitted with concealed hinges and a lockable lifting handle. The hatch shall be a Safe-Hatch access cover from Flygt or approved equal. A removable lifting davit and stainless steel chain shall be provided to raise and lower the comminutor.

C. A reverse clearing control panel shall be provided in a NEMA 4X enclosure with momentary reversing, automatic shutdown and alarm protecting the comminutor from damage. The control system shall sense an overload or jam condition; reverse the drum rotation for a 2-second period, then restore forward rotation. This sequence shall persist until the obstruction has been cleared, or until the motor overload protection trips out the motor.

8.2.7. Water Supply.

A. Where public water supply is available, furnish and install a minimum 1" diameter metered water service with reduced pressure backflow preventer (RPBP). The RPBP shall be installed in a location above grade, where it will not be susceptible to flooding. The water supply shall terminate at a frost-proof yard hydrant. Hose bibs shall also be provided in the drywell in the case of wet well/drywell station. Service to include all fees and charges for the provision thereof.

B. Where public water supply is not available, furnish and install a well and pump with all controls, power supply, bladder type hydro-pneumatic pressure tank, air line / gage well water level detection system, frost proof hydrant, and necessary appurtenances. The well and pump must be capable of producing a minimum of 5 gpm at 50 to 70 psi gage pressure at the hydro-pneumatic tank.

8.3. MATERIALS AND EQUIPMENT

8.3.1. Description of Equipment.

The Applicant shall furnish a complete description of all equipment to be supplied including manufacturer's information and relevant pump characteristic curves based on laboratory tests of existing similar pumps. The curves shall show the capacity, head, efficiency and brake-power throughout the head and capacity range.

8.3.2. Spare Parts and Tools.

A. The Applicant shall furnish one complete set of all the tools that are necessary for the maintenance and repair of the pumps. One pressure grease gun for each type of grease required for pumps and motors shall be furnished.

B. Spare parts shall consist of one extra set of ball and/or roller bearings, two sets packing, or mechanical seals for each pump, and one extra shaft sleeve for each pump size. For submersible pumping applications, one spare pump shall be provided.

8.3.3. Pipes and Fittings.

A. Suction and discharge flanged piping shall be Class 53 (Min), {Epoxy lined} Ductile Iron in accordance with ANSI A21.50 and ANSI A21.51 or AWWA C115 and C150. Fittings shall be Ductile Iron in accordance with ANSI A21.10 or AWWA C110, up to 12" inclusive, 250 psi rated. Flanged joints shall be used inside structures or above grade.

B. Ductile iron pipe and fittings for suction and discharge shall be lined with series 431 perma-shield pl by Tnemec, Protecto 401 by Indurall, or approved equal. The lining thickness shall be 40 mils minimum. Application shall be performed by an applicator approved by the coating manufacturer, in accordance with manufacturer's instructions and under controlled conditions at the applicator's shop or the pipe manufacturer's plant. Applicator shall submit a certified affidavit of compliance with manufacturer's instructions and requirements specified herein.

C. Unless otherwise specified, all exposed exterior ferrous surfaces shall be painted with an applicable paint system.

D. Pipe hangers and supports shall be provided at suitable distances along the pipeline. Pipe hangers and supports shall conform to MSS SP-58: Pipe Hangers and Supports - Materials, Design and Manufacture and MSS SP-69: Pipe Hangers and Supports - Selection and Application. All hangers and supports shall be of an approved standard design where possible and shall be adequate to maintain the supported load in proper position under all operating conditions. The minimum working factor of safety for all supporting equipment, with the exception of springs, shall be five times the ultimate tensile strength of the material, assuming 10-feet of water filled pipe being supported. All pipe and appurtenances connected to equipment shall be supported in such a manner as to prevent any strain being imposed on the equipment.

E. All rods, clamps, hangers, inserts, anchor bolts, brackets and components for interior pipe supports shall be furnished with galvanized finish, hot dipped or electrogalvanized coated, except where field welding is required, where cold-applied galvanizing may be used. Interior clamps on plastic pipe shall be plastic coated. Supports for copper pipe shall be copper plated or shall have a 1/16-inch plastic coating. All rods, clamps, hangers, inserts, anchor bolts, brackets and components for exterior pipe, submerged pipe, pipe within outdoor structures, and pipe in wet wells shall be of Type 316 stainless steel.

F. Cast iron and ductile iron, steel and stainless steel pippins shall be supported at a maximum support spacing of 10-feet with a minimum of one pipe support per pipe

section or joint. Floor supports shall be given preference. Support spacing for steel and stainless steel piping, 2-inch and smaller in diameter, and copper tubing shall not exceed 5-feet. For all stainless steel piping, provide neoprene isolators between the pipe and support components. Supports for individual PVC pipes shall be as recommended by the manufacturer except that the support spacing shall not exceed 3-feet. All vertical pipes shall be supported at each floor or at interval of not more than 12-feet by approved pipe collars, clamps, brackets, or wall rests and at all points necessary to insure rigid construction. All vertical pipes passing through pipe sleeves shall be secured using a pipe collar. No piping shall be supported from other piping or from metal stairs, ladders, and walkways, unless specifically direct or authorized by the Town.

8.3.4. Valves.

A. Gate Valves.

(1) Gate valves shall have flanged, screwed or solder ends as required and shall be brass, bronze, Type 304 stainless steel, or produced with fusion coated epoxy iron bodies, they shall be as manufactured by Mueller or approved equal.

(2) Valves shall open to the left (counter-clockwise). Operating nuts or wheels shall have cast thereon, an arrow and the word "open" indicating the direction of opening.

B. Plug Valves.

(1) Plug valves shall be of the offset disc type, 1/4 turn, non-lubricated, serviceable (able to be repacked) under full line pressure and capable of sealing in both directions at the rated pressure. The disc shall be completely out of the flow path when open. Plug valves shall be as manufactured by DeZurik.

(2) Plug valves shall have a minimum port area of 80-percent. Valves shall be rated for 175 psi WOG (Water, Oil and Gas) working pressure for sizes 4-in to 12-in inclusive, and conform to the requirements of AWWA C504. All exposed bolts, nuts, and hardware shall be Type 316 stainless steel.

(3) The valve disc shall be cast iron, ASTM A126, Grade B, or ductile iron, ASTM A536, Grade 65-45-12, and be of one piece. It shall be removable without removing the valve from the line.

(4) Valve seats shall be resilient and of the continuous interface type having consistent opening and closing torques and shall be no-jamming in the closed position. Screw-in seats are not acceptable.

(5) All valves shall be provided with a handwheel actuator with valve position indicator.

(6) Plug valves shall be installed so that the direction of flow through the valve and the shaft orientation is in accordance with the manufacturer's recommendations. Unless otherwise noted, the shaft shall be horizontal with the plug opening up.

C. Check Valves.

(1) Check valves 2-inch diameter and larger shall be iron body, bronze mounted, single cast iron or cast steel disc with bronze seat ring, extended stainless steel hinge arm with outside lever(s) and weight(s), with oil damped controlled closing, full opening with bolted cover, and shall conform to AWWA C508. They shall be designed for a minimum working water pressure of 150 psi water working pressure nonshock and hydrostatically tested at 300 psi.

(2) Check valves shall be APCO Model 6100 or approved equal.

(3) Check valves smaller than 2-in and smaller for installation in copper and steel pipes shall be bronze, swing type, 125-lb with solder or screwed ends and shall be Hammond 1B-940 or approved equal.

D. Surge Relief Valves

Sewage surge relief valves may be required in combination with the controlled closing swing check valves to limit water hammer associated with pump shut down and check valve closure on pumping stations with high total dynamic head and/or long force mains. If required, they shall be APCO, Model 6300 or approved equal. If surge valves are utilized, they shall be manufactured by the same manufacturer as that of the controlled closing check valves. A manufacturer's representative shall be on-site to coordinate the operation of these valves during start-up.

E. Sewage Air Release Valves

(1) Every effort shall be made to avoid the need for sewage air release valves due to their susceptibility to malfunctioning. Consider alternative pumping locations, alternative force main profiles, or deeper installation to eliminate high spots that would require the installation of air release valves. If these alternatives are completely impractical, the installation of air release valve might be considered. If utilized they must be properly sized and installed in pairs to provide a backup if one fails.

(2) Sewage air release valves shall be as manufactured by APCO Model 400 or 450, tall body style, stainless steel fitted, with inlet, blowoff, and shutoff valves, and back-flushing attachments.

(3) If sewage air release valves are utilized, they shall be installed in a precast concrete vault or manhole with a minimum dimension of 6'-6" between floor and ceiling and a minimum clearance of 2-feet between piping and walls, and 1-foot between top of air release valve and ceiling. The valve shall be installed on a non-reducing tee with a threaded restrained plug on the full diameter branch outlet. The vault or manhole shall be provided with an aluminium or stainless steel hatch and access stair to facilitate entry and maintenance. A screened ventilation pipe shall be provided to allow equalization of air pressure inside and outside of vault. A 12-inch diameter stone drainage sump shall be provided in the vault floor in areas not susceptible to high ground water. In areas with high groundwater, the stone sump shall be replaced by a concrete sump with the sump pump discharging to grade. Vaults and hatches shall be designed for highway loading if located in or adjacent to travelled areas. The top of the vault or manhole shall be located a minimum of 6-inches above surrounding grade to limit the potential for inflow of runoff.

8.3.5. Emergency Generator Building.

A. An emergency generator shall be mounted permanently in a building together with all appropriate electrical controls (including automatic transfer switch). The building shall also house the pump control panel specified elsewhere. The building shall be a masonry type building blending aesthetically with the surrounding environment. Construction details of the building shall be subject to approval by the Town. Temporary structures will not be accepted, nor will metal or fiberglass generator housings.

{Alternate backup power such as a standby engine may be considered, and a fiberglass enclosure for the entire station may be considered if an engineered system is used}

B. The floor elevation of the generator building shall be minimum 2 feet above the 100 year flood elevation and 6-inches above surrounding grade.

8.4. SUCTION LIFT PUMPING STATIONS

8.4.1. General.

A. Wet wells shall be designed in accordance with the Maryland Environmental Health Administration Design Guidelines for Sewerage Facilities, 1978 Edition. Wet wells shall be sized to avoid heat buildup in the pump motor due to frequent starts and to avoid septic conditions due to excessive detention time. The effective capacity (e.g., capacity between working levels) of the wet well shall generally provide a holding period not to exceed 10-minutes for the maximum monthly average flow. Where tributary flow distance is short, a holding period, not to exceed 30-minutes for the maximum monthly average flow, should be considered.

B. The wet well floor slope shall have a minimum slope of one horizontal to one vertical (1:1) to the hopper bottom. The horizontal area of the hopper bottom shall be not greater than necessary for proper installation and functions of the inlet.

C. The wet well shall be designed to minimize the turbulence from the incoming sewer, such as a cascade that might entrain air in the liquid. There must be sufficient submergence at the low water level to allow entrained air to escape, to prevent vortex formation, and provide adequate NPSHA at the pump inlet.

D. Wet wells shall be of reinforced concrete. All interior concrete surfaces (floor, walls, ceiling, pipe entries, and structure chimney) shall have an impermeable HDPE or PVC lining to protect against hydrogen sulfide corrosion. The liner shall be permanently fused to the concrete structure during the structure casting process.

(1) HDPE lining shall have a minimum thickness of 2-mm (0.0787-inchers) with a minimum of 39 anchor studs per square foot. Flat liner sheet used for overlapping joints shall have a minimum thickness of 3 mm. All joints shall be sealed by thermal welding by manufacturer's certified welders. HDPE lining shall be AGRU Sure Grip HDPE, Polypropylene Random Copolymer or equal.

(2) PVC lining shall have a minimum thickness of 1.65-mm (0.065-inches). The PVC liner, channel joints, H-joints, and corner joints shall be manufactured from Polyvinyl Chloride resin (PVC) and shall be white in color. A combination of standing ribs and mechanical dovetails shall be used to secure the liner panels and shall be spaced a maximum of 6-inches apart. Liner panels shall be formed to the correct radius for circular surfaces. Liner panels with locking extensions shall be able to withstand a test pull of 100 pounds per linear inch applied perpendicular to the concrete surface for a period of 60-seconds with a temperature between 70° and 80° F. PVC liner panels shall have a continuous return into the joint for a minimum of 0.50-inch. PVC lining shall be Dura Plate 100 as manufactured by A-Lok Products, Inc. or equal.

E. The wet well access hatch shall be the {{Safe-Hatch access covers from Flygt}} with safety grates or approved equal.

F. A work platform shall be installed in the wet well above the high water elevation near the elevation of the end-of-pipe comminutor. Safety chains or railings shall be provided if required. All metal fabrications or hardware shall be Type 316 stainless steel. The platform shall be attached to the walls with stainless steel anchors and liner penetration adapters as recommended by the lining manufacturer.

G. The wet well must be capable of being isolated from the incoming flow by means of a valve located upstream of the wet well. {{A pump around emergency bypass connection must be provided}}.

H. The elevation of the top floor and/or access to the pumping station shall be a minimum of 2 feet above the 100 year flood elevation and 6-inches above surrounding grade.

I. All pumping equipment shall be housed in a masonry type building {{??? Or prefabricate composite enclosure}} blending aesthetically with the surrounding

environment. Adequate floor space and clearance from walls shall be provided for access to all equipment for maintenance. Construction details of the building shall be subject to approval by the Town.

J. Mechanical lifting mechanism(s) shall be provided for all equipment weighing more than 60-lbs. The lifting mechanism shall be appropriate for the application.

K. The station shall be designed and constructed in accordance with the requirements of MDE, OSHA, and the Maryland Department of Labor, Licensing, and Regulation.

8.4.2. Pumping Equipment.

A minimum of two (2) pumps shall be provided and installed. Pumps shall be Gorman-Rupp T-Series, self priming, horizontal, centrifugal, V-belt driven sewage pumps, each sized to meet the design flow. The pumps shall be equipped with tungsten titanium carbide mechanical shaft seals and removable cover plate for complete access to pump interior. Pumps shall be furnished with internal piping and valves consisting of discharge check valves, automatic air release valve for each pump and a three-way discharge plug valve.

{{Eradicator™ Solids Management System}}

8.4.3. Motors.

A. The pump motors shall be horizontal, open drip-proof, induction type, suitable for 3-phase, 60 Hz, 230/460 volt electrical service. The motors shall have a service factor of 1.15 that shall not be utilized under normal operating conditions. They shall have normal starting torque and low starting current, as specified for NEMA Design B characteristics. The motors shall not be overloaded at the design condition, or at any head in the specified operating range. Each motor shall be in current NEMA design cast iron frame with copper windings.

B. Power shall be transmitted from motors to pumps by means of V-belt drive assemblies. The drive assemblies must be selected to establish proper pump speed to meet the specified operating conditions. Each drive assembly shall have a minimum of two V-belts. Drive systems with a factor of safety of less than 1.5 to 1.0 shall not be considered sufficient. Computations of the factor of safety shall be based on performance data provided by the drive manufacturer.

C. Pump drive transmission belts shall be enclosed on all sides with safety guards having no opening larger than ½-inch. They shall be capable of being removed from the pump unit without interference with any unit component.

D. The pump motors shall be specifically built NEMA P base, open drip-proof induction type, suitable for 3-phase, 60 Hz, 230/460 volt electrical service. The motors shall have a service factor of 1.15 that shall not be utilized under normal operating conditions. They shall have normal starting torque and low starting current, as specified for NEMA Design B characteristics. The motors shall not be overloaded at the design condition, nor at any head in the specified operating range.

E. Motors shall have Class F insulation, Class B temperature rise, 40_{o} ambient. Insulation shall be of non-hygroscopic materials which resist moisture and are fungus resistant.

F. Each motor shall have oversized, grease-lubricated ball bearings with the thrust bearing at the bottom locked in position to eliminate shaft end-play. The motor shaft shall be solid stainless steel.

G. The motor-pump shaft shall be centered, in relation to the motor base, within 0.005". The shaft run-out shall be limited to 0.003".

H. A special varnish treatment shall be applied to the stator windings and rust preventative compounds shall be used to coat the rotor and stator air gap surfaces and protect the motor against corrosion.

{{VFD drives for energy savings, and high inflow PID}}

8.4.4. Controls.

A. Level Control

Provide a control system consisting of a stilling well, non-clog pressure transducer, and receiver or approved “bubbler” type system.

B. Pump Controls.

(1) One Circuit breaker disconnect unit per pump with magnetic trip sized for individual pump protection. This unit shall provide the maximum electrical motor protection available, serving as a circuit breaker and manual disconnect switch.

(2) One across-the-line starter per pump, sized in accordance with NEMA Horsepower standards.

(3) One N.O. auxiliary contact for run status and one N.C. auxiliary contact for stop status, overload relay, and all other controls and accessories necessary for proper operation and protection.

(4) Low voltage (24 VAC) level sensing circuitry for intrinsically safe relaying.

(5) Solid state alternator for duplex controls.

(6) Individual toggle type selector switches to provide "Auto-Off-Hand" control of each pump.

(7) 24 Volt AC control transformer, protected by circuit breakers or fuses on both the primary and secondary.

(8) Terminals shall be provided for connection of the level sensors.

(9) A removable dead-front panel shall be provided to protect the operator.

(10) All operator controls, toggle switched, circuit breakers, etc. shall be accessible without removing the dead-front panel.

(11) NEMA 1 enclosure with latch mechanism Duplex 3-phase 240 or 480 volt power supply as dictated by the power company and motor requirements.

(12) A relay which automatically reconnects the control circuit to pump number 2 if pump number 1 circuit breaker trips.

(13) High level and low level alarm relays with unpowered contacts and terminals shall be included.

(14) Pump running transformer type pilot lights (red) mounted on operator's control panel. Pump stopped pilot lights (green) mounted on operator's control panel.

(15) Non-resettable running time meters mounted on operator's control panel.

(16) Seal leak detector for each pump with unpowered relay contacts for alarming.

(17) 3-phase power monitor with adjustable settings, stops pump for low voltage, single phasing and phase reversal.

(18) One pump to be locked off during generator operation with ability to switch to other pump should selected pump fail.

(19) A "Hand-Off-Auto" selector switch provided for each of the two pumps controlled with the following operation:

(a) Hand Position: In this position, the pump controlled by the switch will run regardless of the wet well level. The pump will continue to run until the switch is turned to "Off" or "Auto".

(b) Auto Position: In this position, the operation of the pumps is controlled automatically by the level sensors in the wet well as follows:

(20) The control circuit is placed in standby mode when the liquid level rises to tilt the lowest level sensor which is a redundant cutoff and low water alarm.

(21) As the level continues to rise, the control circuit is energized when the pump off level sensor rises.

(22) As the level continues to rise and the next level sensor is tiled, the first (lead) pump will start. In this step, the pumps will alternate on successive cycles. If pump number 1 starts first on one cycle, pump number 2 will start first on the next cycle. This insures equal operating time and wear on each pump.

(23) As the level in the well is pumped down, the pump(s) will continue to operate until the level drops just below the pumps off level sensor.

(24) If the level in the well continues to rise with one pump in operation, the second pump will be turned on when the level reaches the lag pump on high water alarm level float.

(25) If the water continues to rise, the high water alarm level sensor will activate an alarm.

8.4.5. Dehumidifier.

The Applicant shall install an automatic refrigeration type dehumidifier to maintain the relative humidity of the air in the pump chamber as low as possible. The dehumidifier shall be capable of removing three gallons of moisture per twenty-four hours, and shall be automatically controlled by an adjustable thermostat and a panel-mounted humidistat. The condensation shall drain to the sump.

8.4.6. Sump Pump.

The Applicant shall install in each pump station a submersible sewage or grinder sump pump with motor mounted directly above the impeller. The volute casting shall have feet to support the impeller entrance the proper distance above the bottom of the sump. The pump shall have a minimum capacity of 100 gpm. The pump shall be controlled by a level control switch, capable of operation on a 2" differential water level. It shall discharge to the wet well through a 1-1/4" - 2" pipe with two check valves and a gate valve within the pump chamber.

8.4.7. Mechanical Ventilation.

Mechanical ventilation shall be provided for the wet well and other structures. The equipment must be capable of providing a continuous rate of 12 air changes per hour in the wet well and at least 30 air changes per hour for an intermittent rate in other structures as dictated by the requirements of MDE and OSHA. Air shall be forced into the wet well by mechanical means rather than exhausted from the wet well.

8.4.8. Wiring.

The wiring and power feed lines shall conform to the National Electric Code. All wiring in the pump station shall be color-coded as indicated on the wiring diagram. Minimum wire size shall be #12 AWG copper. All wiring outside the panel shall be in rigid galvanized steel conduit, 3/4" minimum, except for 115 volt accessory items which are provided with connecting insulated service cord by the manufacturer. Accessory items such as the sump pump, dehumidifier, and air compressors shall be plugged into polarized, grounded convenience outlets, located close to their installed position so that such items can be readily removed and serviced if necessary.

8.4.9. Heater.

An electrical heater shall be installed in each room of the pumping station building(s) and shall be sized to maintain a minimum ambient temperature of 60$_{o}$ F in the room. The heater shall be thermostatically controlled. The heater shall not be placed within two (2) feet of a control panel.

8.4.10. Station Painting.

A. Metal Surfaces.

All motors, pumps, bases, brackets, ladders, piping and steel supports shall be properly primed and painted with two coats of rust inhibitor paint in strict accordance with the manufacturer's recommendations.

B. Plastic Surfaces.

One coat of epoxy primer followed by one coat of washable epoxy paint.

C. Concrete and Masonry Walls and Ceilings.

One coat of epoxy primer followed by one coat of washable epoxy paint.

D. Floors.

Approved epoxy floor paint with non-skid additive.

8.5. DRYWELL/WETYWELL SUBMERSIBLE TYPE STATIONS

{{Only allowed in special circumstances}}

8.5.1. General.

A minimum of two pumps must be provided and installed. The station, including pump and valve chambers, manholes, meter pits, and other structures constructed below grade shall be watertight and must meet current ASTM Specifications. A separate valve chamber must be provided. The elevation of the top of the wet well shall be minimum 2 feet above the 100 year flood elevation. The Station shall include a drywell and accessibility for the pump.

8.5.2. Sump Basin and Cover.

The sump basin shall be of reinforced concrete and shall be provided with a hinged aluminum cover of non-skid pattern. The cover shall be large enough to comfortably accommodate the pumps. The cover shall have angle frame with rectangular opening of sufficient size to permit easy removal of the pumps. Cover shall have a hold-open bar that can be locked in open position. Cover shall have a hasp and staple for locking with a padlock. All hardware shall be of non-corrosive material. Paint all interior concrete surfaces with SAVEREISEN Corrosion Clad Polymer Lining no. 210 or approved equivalent.

8.5.3. Valve Chamber.

A. A separate valve chamber shall be provided on the discharge side of the sump basin. The valve chamber shall accommodate a check valve and an isolation valve for each pump, and shall be large enough to comfortably accommodate the valves and fittings.

B. A NEMA 4 light switch shall be provided on each check valve to signal open/close operation. The switches shall have N.O./N.C. contacts rated 120 volts, 10 amps. These switches shall be connected to the pump fail circuitry.

C. The valve chamber shall be provided with an aluminum Safe-Hatch access covers from Flygt. Chamber shall be minimum 4'-6" deep with aluminum access ladder with rungs at 12" on center. A 3" diameter drain shall be provided from the floor of the chamber to the pump sump. The floor shall be sloped towards the drain. The drain shall have a check valve to prevent backflow from pump sump in case of high water level in the pump sump.

8.5.4. Lift-out Rail System.

Station shall be provided with a rail system to facilitate easy removal of the pumps. Rails shall be made of stainless steel and are to be firmly fixed with rail supports to the wall of the sump basin.

8.5.5. Submersible Pumps.

A. Casings.

Pump casing and motor casing of ASTM-A48 cast iron. Pump casing of the single volute type, ribbed to prevent excessive deflection and hydrostatically tested to twice the design head, or one and one half times the shutoff head, whichever is greater. Volute sized at all points to pass solids which can pass through the impeller and internally finished to provide smooth, unobstructed flow.

B. Impeller.

Non-clogging type of ASTM-A48 cast iron, statically, dynamically and hydraulically balanced, capable of passing 3" solids. Key seat the impeller and secure it to the shaft by a hex head impeller nut.

C. Pump Shaft.

Stainless steel of sufficient strength and size to safely transmit the maximum torque developed by the drive unit. Shaft sized to provide rigid support of the impeller and prevent excessive vibration.

D. Pump Shaft Bearings.

Ball or roller type, oil lubricated. Upper bearings to support full dead load and hydraulic thrust. Design bearings with a 20,000 hour B10 minimum bearing life per AFBMA test procedure.

E. Shaft Seals.

Provide each pumping unit with a double mechanical seal, running in an oil filled reservoir, composed of two separate lapped faced seals, each consisting of one stationary and one rotating tungsten carbide ring each held in contact by a separate spring, so that the outside pressure assists spring compression in preventing the seal faces from opening.

(1) Protect the compression spring against exposure to the pumped liquid. Seal the pumped liquid from the oil reservoir by one face seal and the oil reservoir from the motor chamber by the other.

(2) Equip each pumping unit with a liquid sensing device to prevent damage to the motor in the event of a shaft seal failure.

F. Pump Motor.

Provide a motor having Class F insulated windings (which are moisture resistant) housed in watertight casing. The motor shall have cooling characteristics suitable to permit continuous operation in a totally, partially, or non-submerged condition. Motors shall be rated Class A, Group D hazardous.

G. Pump Accessories.

Provide the following accessories with each pumping unit.

(1) Stainless steel chain of adequate strength and length to permit raising of the pumping unit to the intermediate floor level for inspection and removal. Chain must have large secondary links attached at minimum 10' intervals.

(2) Guide rails.

(3) Upper guide rail brackets.

(4) Pump mooring plate with discharge elbow and lower guide rail support brackets.

(5) Power cable of adequate length.

H. Provide the following spare parts (packaged and labelled for storage).

(1) One complete pump, including motor as a complete working unit, keys, couplings and nuts.

(2) One additional set of radial and combination radial and thrust bearing.

(3) One additional set of seals.

8.5.6. Controls.

A. Mercury Float Switch Controller {{or equivalent}}.

Provide a control system consisting of mercury float switch and other necessary appurtenances. Switches to be molded into an epoxy filled polypropylene float. Provide two spare floats with cables.

B. Pump Controls.

(1) One Circuit breaker disconnect unit per pump with magnetic trip sized for individual pump protection. This unit shall provide the maximum electrical motor protection available, serving as a circuit breaker and manual disconnect switch.

(2) One across-the-line starter per pump, sized in accordance with NEMA Horsepower standards.

(3) One N.O. auxiliary contact for run status and one N.C. auxiliary contact for stop status, overload relay, and all other controls and accessories necessary for proper operation and protection.

(4) Low voltage (24 VAC) level sensing circuitry for intrinsically safe relaying.

(5) Solid state alternator for duplex controls.

(6) Individual toggle type selector switches to provide "Auto-Off-Hand" control of each pump.

(7) 24 Volt AC control transformer, protected by circuit breakers or fuses on both the primary and secondary.

(8) Terminals shall be provided for connection of the level sensors.

(9) A removable dead-front panel shall be provided to protect the operator.

(10) All operator controls, toggle switched, circuit breakers, etc. shall be accessible without removing the dead-front panel.

(11) NEMA 1 enclosure with latch mechanism Duplex 3-phase 240 or 480 volt power supply as dictated by the power company and motor requirements. (12)A relay which automatically reconnects the control circuit to pump number 2 if pump number 1 circuit breaker trips.

(13) High level and low level alarm relays with unpowered contacts and terminals shall be included.

(14) Pump running transformer type pilot lights (red) mounted on operator's control panel. Pump stopped pilot lights (green) mounted on operator's control panel.

(15) Non-resettable running time meters mounted on operator's control panel.

(16) Seal leak detector for each pump with unpowered relay contacts for alarming.

(17) 3-phase power monitor with adjustable settings, stops pump for low voltage, single phasing and phase reversal.

(18) One pump to be locked off during generator operation with ability to switch to other pump should selected pump fail.

(19) A "Hand-Off-Auto" selector switch provided for each of the two pumps controlled with the following operation:

(a) Hand Position: In this position, the pump controlled by the switch will run regardless of the wet well level. The pump will continue to run until the switch is turned to "Off" or "Auto".

(b) Auto Position: In this position, the operation of the pumps is controlled automatically by the level sensors in the wet well as follows:

(20) The control circuit is placed in standby mode when the liquid level rises to tilt the lowest level sensor which is a redundant cutoff and low water alarm.

(21) As the level continues to rise, the control circuit is energized when the pump off level sensor rises.

(22) As the level continues to rise and the next level sensor is tiled, the first (lead) pump will start. In this step, the pumps will alternate on successive cycles. If pump number 1 starts first on one cycle, pump number 2 will start first on the next cycle. This insures equal operating time and wear on each pump.

(23) As the level in the well is pumped down, the pump(s) will continue to operate until the level drops just below the pumps off level sensor.

(24) If the level in the well continues to rise with one pump in operation, the second pump will be turned on when the level reaches the lag pump on high water alarm level float.

(25) If the water continues to rise, the high water alarm level sensor will activate an alarm.

8.6. ELECTRICAL REQUIREMENTS

8.6.1. Monitoring and Alarm System.

A. An alarm system capable of monitoring the following functions and transmitting the relevant signal to the designated location, shall be installed:

Power failure	Generator failure
High wet well	Louver failure
Low wet well	Pump failure
Water in drywell	

B. A monitoring system shall provide the following parameters:

Level

Flow

Pressure

Pump starts

{{USE Mission Communications RTU and cellular service}}

8.6.2. Emergency Power.

A. The Applicant shall install a diesel emergency generator set and automatic transfer switch required to run the pumps and all equipment within the station upon loss of normal power.

B. The system components shall be new equipment of current design, not one-of-a-kind, and consist of a Maryland approved engine-driven, electric plant with mounted start-stop controls, an automatic load transfer control, fuel, oil, and anti-freeze, and necessary accessories. All components shall be completely built, tested, and shipped by a manufacturer who has been regularly engaged in the production of such equipment for the past ten years and who has a local parts and service facility, so

there is one responsibility for the proper functioning of the entire system. The plant shall be as manufactured by Kohler, Caterpillar, Onan, or approved equal.

C. The plant shall be mounted on a welded steel skid base, which in turn shall mount on 6" high I-beams securely mounted to the frame and a concrete pad. The pad shall be sloped to prevent standing water to accumulate under the generator set. The starting batteries shall be placed on a cast iron rack inside the housing. The muffler shall be a Hospital-grade silencer attached to the exhaust line by 125-lb. standard pipe flanges. The exhaust line shall contain a condensate trap with drain cock at the first point of rise in the line from the engine. Only long radius elbows shall be used in the exhaust line.

D. All required anchor bolts shall be furnished and installed. A stainless steel flexible pipe shall connect engine to the exhaust system.

E. Exhaust air ductwork between radiator and exhaust louver shall be 20-gauge galvanized sheet steel. Engine radiator shall have a flexible duct adapter.

F. A thermostatically controlled jacket water heater shall be provided to maintain a jacket water temperature of 90_{o} F. This unit shall be as manufactured by Chromalox, Singer, or approved equal.

G. Provide a line circuit breaker with the generator. Breaker shall be rated to handle the generated fault currents and shall be one of those listed by the transfer switch manufacturer. Breaker shall have the required number of poles and current rating capable of handling required load.

H. Provide generator control panel with the following: voltmeter, ammeter, selector switch, start controls, voltage level adjustment rheostat, oil pressure gauge, fault indicators for safety shutdown, "Auto/Manual" switch, water temperature gauge, battery charge rate ammeter, field circuit breaker, running time meter, panel face illumination from the battery, generator failure output contacts.

I. Provide base mounted diesel fuel tank of sufficient capacity to sustain a minimum of 24 hours running at full load, fuel gauge, fuel lines, threaded vent opening and a full tank of diesel fuel.

J. The use of propane gas as an alternative energy source will be considered by the Town.

K. A current limiting battery charger shall be furnished to automatically recharge the starting batteries. Charger shall float at 2.17 volts per cell and equalize at 2.33 volts per cell. It shall include overload protection, silicon diode full wave rectifiers, voltage surge suppressor, DC ammeter, and fused AC input. AC input voltages shall be 120 volts. Amperage output shall be no less than 5 amperes. Charger shall be LaMarche Manufacturing Company, Model A-5, ESB Inc., or approved equal.

8.6.3. Transfer Switch.

A. The automatic transfer switch shall be fully rated, to protect all types of loads, inductive and resistive, from loss of continuity of power. The switch shall afford complete protection. The switch shall be rated as suitable for all classes of loads without derating, either open or enclosed.

B. The transfer switch shall automatically transfer its load circuit to an emergency or alternate power supply from failure of its normal or original supply. Upon restoration of the normal supply, the transfer switch shall automatically retransfer its load circuits to the normal supply.

C. All pilot devices/relays shall be of the industrial type rated 10 amperes with self cleaning contacts.

D. Components of the operating mechanism shall be insulated or electrically dead.

E. All electrical equipment or apparatus of any one system must be the product of one manufacturer, or equivalent products of a number of manufacturers which are suitable for use in a unified system. No circuit breaker types are acceptable, nor parts thereof.

F. For complete protection, close differential voltage sensing relays shall be provided to monitor each phase of the normal supply. A drop in voltage in any phase below the predetermined dropout value of the relay shall initiate load transfer. The relay shall initiate retransfer of the load to normal supply as soon as the voltage is restored in all phases beyond the predetermined pickup value of the relay.

G. The transfer switch shall obtain its operating current from the sources to which the load is being transferred.

H. The automatic transfer switch shall also be furnished with the following options: adjustable 2 to 120 seconds time delay on normal to emergency; adjustable 0 to 15 second time delay on engine starting; adjustable 12 seconds to 30 minutes time delay on emergency to normal; adjustable 0 to 30 minutes, set at five (5) minutes time delay for engine cool off; frequency/voltage relay for emergency source; test switch in cover of switch; normal supply pilot lights, emergency supply pilot light; engine start-stop contacts; relay auxiliary contacts on normal and emergency source, 1 N.O. and 1 N.C.; solid neutral bar assembly; plant exerciser for automatic test operation of plant with transfer of load for pre-selected intervals (adjustable 0-168 hours in multiples of 15 minutes) at least once a week.

I. All accessories and equipment shall be front accessible for ease of maintenance or removal.

J. Transfer switches and options shall be as manufactured by ASCO 940, Kohler, Onan, or approved equal.

8.6.4. Lighting.

A. The Applicant shall furnish and install lamps and accessories as required. Prior to acceptance of building by the Town, all fixtures shall be cleaned, free of dust, insects and all foreign matter. The light fixture schedule is listed below:

(1) Industrial, ceiling mounted LED, 120 volts.

(2) Outdoor wall-mounted LED, 120 volts, photo control.

8.6.5. Electrical Unit Heaters.

A. Horizontal forced air unit heaters shall be rated for the building size. Mounting brackets designed for either ceiling or wall swivel mounting shall be furnished for each heater. The cabinet shall be of 18 gauge die-formed furniture grade steel.

   Individual adjustable louvers shall be furnished to provide desired control of discharge air. All metal surfaces of the casing shall be phosphate coated to resist corrosion, with a baked enamel finish.

B. Automatic reset thermal over-heat protection shall be provided.

C. Motors shall be of the totally enclosed fan-cooled continuous duty (TEFC), sleeve bearing type, equipped with built-in thermal overload protection.

D. Fans shall be aluminum, directly connected to fan motor, dynamically balanced and designed specifically for unit heater application.

E. Heaters shall be equipped with built-in comfort control thermostats and necessary control transformers and contactors. Heaters shall be equipped with cord and twist lock plug for connection to receptacle and shall be Chromalox Type MUH, Singer, Berko, or approved equal.

F. Convection Ceramic Heaters or other alternates may be used with he permission of the Town. They must be appropriately sized and spaced.

8.6.6. Metal Louvers. (Ventilation)

A. The Applicant shall furnish and install all metal louvers (both the gravity and motor operated type) required for installation in the Generator or pump Building. The metal louvers shall be complete with all motors, controls, screens, trim and closure pieces for a complete installation. It shall be the responsibility of the Applicant to check all opening sizes and completely coordinate the installation to insure a neat workmanlike job.

B. A gravity louver shall be furnished for installation on the generator discharge. This shall be a fully automatic louver with the exhaust blades normally in a closed position and set to open when air pressure is applied. The blades shall move independently of each other, smoothly and without flutter.

C. The head, sill, jambs and blades shall be extruded aluminum section, 6063-T52 alloy with reinforced bosses. The exhaust blades shall be cushioned the full length by vinyl gaskets. The heads, sills and jambs shall be one piece structural members with integral caulking strips and retaining beads. All fasteners to be stainless steel or aluminum. All louvers shall be provided with #2 mesh .063 inch diameter wire bird screen secured by an extruded aluminum frame on the louver exterior which can be easily removed for cleaning.

D. The louvers shall be free of scratches and blemishes and provided in an epoxy finish in a color to be selected by the Town.

E. The gravity louver shall be Model SA/FBE as manufactured by Airolite Co., or approved equal.

F. A motor operated louver shall be furnished for use as the generator air intake. This shall be a fully automatic louver with the operating blades normally in a spring closed position and opened by a motorized operator. The blades shall operate in a smooth continuous motion.

G. The head, sill, jambs, and blades shall be extruded aluminum sections, 6063-T52 alloy with reinforced bosses. The operating blades shall be double gasketed with a vinyl material. The heads, sills, and jambs shall be one piece structural members with integral caulking slot and retaining beads. All fasteners shall be stainless steel or aluminum.

H. The operating blades shall be operated by an electrically controlled motor operator. The motor shall be totally enclosed and suitable for operation on 120 volt, 60 Hz, single-phase service. The unit shall be furnished with all controls and miscellaneous accessories for a complete working installation.

I. The motor operated louver shall be manufactured by Airolite, or approved equal.

J. The louvers are to be sized to suit the generator air requirements. The exhaust louver shall be sized so that the maximum pressure drop shall not exceed 1/2" of water when the generator is operating at full speed. The intake louver shall be sized 25% larger than the exhaust louver.

K. The motor operated intake louver shall be wired for both manual and automatic operation. A selector switch shall be provided for manual open-close operation.

L. The intake louver shall automatically open when the emergency generator starts, and shall remain open until the generator shuts down. All necessary controls, relays, and wiring necessary for complete working installation shall be furnished and installed.

M. A thermostat shall also be provided to automatically open the intake louver on excessive heat build-up within the generator building. Thermostat shall have control range of 70° to 140° F, with a 2° F differential, and shall be Model T631C, as manufactured by Honeywell or approved equal.

N. A limit switch shall be installed at the intake louver location, and shall be positioned so that the switch is operated by the opening of the louver blades. If the louver and switch do not open after a preset time, a relay shall signal a "louver failure" condition to the alarm system. Limit switch shall be as manufactured by Westinghouse, Square D, or approved equal.

8.6.7. Electrical Construction.

A. The Applicant shall meet with the electric company and the local communication provider to determine all requirements at the site for service and metering. Any excess charges by the utilities for furnishing the required service shall be the responsibility of the Applicant.

B. The Applicant shall furnish and install a service pole at each pumping station if the service is overhead. Service conductors and raceways shall be installed from the generator building underground to the service pole and up the pole terminating in an approved entrance fitting. The power company will furnish and install an overhead service drop to the pole and connect to service conductors. Poles shall be guyed if required to offset pull of power company's service drop.

C. If the service is underground, the Applicant shall furnish and install underground conduit, current transformer cabinet, and meter base. Current transformer cabinet or self-contained meter base, as necessary, shall be mounted on the generator building. The utility companies will furnish and install the service lateral.

D. A grounding grid shall be provided at the service pole. Metal raceways, metal enclosures of electrical devices, transformer frames, neutral conductor and other equipment shall be completely grounded in accordance with the National Electrical Code. All necessary conduit, conductors, clamps, connectors, etc. for the grounding system shall be furnished and installed by the Applicant.

E. Provide a main service entrance approved disconnect switch with current limiting fuses as required. Heavy-duty type, NEMA 1 enclosure indoors, NEMA 3R enclosure outdoors with padlock attachment; Square D, Cutler-Hammer, G.E. or approved equal.

F. The panel board shall be rated for the voltage present, dead-front type, lockable with thermal-magnetic bolt-on circuit breakers, neutral and ground bus, typed circuit directory.

G. Lightning protection shall be provided on the feeders immediately on the load side of the main disconnect switch, grounding lead as short as possible to grounding system, Innovative Technology, Inc. "P-Plus" series, no equal; A plug-in protector shall be used which has receptacles, Innovative Technology, Inc. Model PIU, no equal.

H. Light switches to be 20 amp, 120/277 volt rated, P&S Series 20AC or approved equal; if weatherproof use P&S WP-1 lever handle weather sealing cover with FS box.

I. Receptacles shall be 20 amp rated, 120 volt, two-pole, grounding duplex, P&S 5362 or approved equal; ground fault type to be P&S 2091-F; if weatherproof use FS box with wet location cover; power outlet receptacle rated as required, heavy-duty, twist lock, P&S Series or approved equal.

J. Underground conduit shall be polyvinyl chloride Schedule 30 as manufactured by Carlon, Sedco, or approved equal. All bends in duct lines of 40_o and greater shall be manufactured steel elbows of the same size as the PVC ducts. Ducts shall be encased in four inches of concrete. Where conduits pass under roadways, parking lots, or on filled ground, a mat shall be provided in concrete, consisting of two longitudinal #4 bars with #3 ties, one foot on center. Trenches shall be backfilled with crusher run or #7 stone.

K. Fittings for IMC conduit shall conform to Federal Specifications W-F-408 and shall be threaded type.

L. Install sealing fittings, Crouse-Hinds type EYS or EZS, Appleton type EYS or ESU, or approved equal, wherever a conduit passes into a hazardous area, or extends between areas having widely different temperatures.

M. Wires and cables minimum size shall be #12, medium hard drawn copper. For 600 volt service and under, wire shall have Type THHN-THWN insulation. Wire size of #10 and larger shall be stranded. All wiring shall be color coded in accordance with current NEC requirements.

N. For wire size #10 and smaller, a solderless type press connector similar to "Buchanan" shall be used with snap-on type nylon insulator; splices of larger sizes of wire shall be made using an indentor type coupling applied with a hydraulic pressure tool.

O. All materials and workmanship shall meet the minimum requirements of the following standards where applicable:

(1) National Electrical Code - National Fire Protection Association, 60 Batterymarch Street, Boston, Massachusetts (N.E.C.)

(2) National Electrical Manufacturers Association, 155 East 44th Street, New York, New York - Standards (NEMA)

(3) Institute of Electrical and Electronic Engineers, 33 West 39th Street, New York, New York - Standards (IEEE)

(4) The U.S.A. Standards Institute, 29 West 39th Street, New York, New York - Standards & Definitions of Electrical Terms (U.S.A.S.)

(5) National Bureau of Standards, Washington, D.C. - National Electrical Safety Code

(6) Underwriter's Laboratories Inc. - Standards

(7) OSHA Standards, where applicable, shall also be met, including those for temporary wiring on construction sites.

P. All necessary permits and fees for this work shall be secured and paid for by the Applicant. Inspection shall be by an approved inspection agency licensed by the State of Maryland and final certificate of approval shall be delivered to the Town prior to acceptance.

8.6.8. Phase Converters.

Three phase power must be provided. No phase converters will be permitted.

8.7. START-UP

A.. The Applicant shall provide the services of fully qualified manufacturer's representatives for services during installation, at start-up, and for instructing the Town's personnel in the operation, routine maintenance, and "trouble-shooting" for all equipment, mechanical and electrical, furnished with the pumping station. Applicant shall full load test the generator for four (4) continuous hours using Applicant furnished load bank. Notify Town 48-hours prior to the test. If testing stops for any reason, correct the problem and start new four (4) hour test. Submit test results. Applicant shall notify the Town at least 24 hours prior to performing load test.

B. The Applicant shall provide five (5) bound copies of a manual fully explaining the operation, routine maintenance and "trouble-shooting" for equipment. The manuals shall include copies of all approved shop drawings and pump curves with all required revisions. These manuals must be submitted to the Town for approval prior to acceptance.

C. The manuals must include information relative to suppliers of spare and replacement parts.

8.8. FIELD TESTS

A. Field tests shall be carried out and all testing equipment and labor required shall be provided at no cost to the Town, to ensure that pumps and all equipment meet the design criteria.

B. The Town's personnel will witness the field tests.

APPENDIX A

APPLICATION FOR WATER SERVICE

Date _____ Lot # _____

Name _____

Address _____

Application is hereby made for the installation of a _____ (size) service connection for water at the above listed location.

Owner
Contractor _____

Present
Address of Owner _____

Charges to be paid when application is filed:

Connection Fee	$ ____8,550.00_____
Or	
Meter Fee	$ _____
User Fee (Benefit Charge)	$ _____
Water Supply Development Fee	$ _____
Total	$ _____

_____
Applicant's Signature

Meter Number _____

Service Connection Date _____

Foreman _____

Account # _____ Book – Sequence _____

APPENDIX B

SANITARY SEWER CONNECTION PERMIT

Name of Applicant _____

Address _____

Subdivision _____ Lot # _____

Street Address _____

Type of Connection

Commercial: _____ Type of Business: _____

Residential: _____

Single House: _____

Apartment: _____ Number of Apartments: _____

Multiple Dwelling: _____ Number of Units: _____

Other: ____ Explain: _____

TYPE OF UTILITIES	IN USE	PLANNED
Full Bath (s):	____	____
Shower (s):	____	____
Commode (s):	____	____
Faucets (Hot & Cold):	____	____
Automatic Washer (s):	____	____
Garbage Disposal Unit (s):	____	____

Connection Fee $ _____13,500.00_____

User Fee (Benefit Charge) $ _____

TOTAL $ _____

_____

Applicant's Signature

Date _____

APPENDIX C

Boonsboro Municipal Utilties Commision Water and Wastewater Connection Permit 21 N. Main St. Boonsboro MD 21713		
BMUC Permit #	**Water**	**Wastewater**
Address		
Subdivision/Lot#		
Parcel/Map		
Date of Application		
Account #		
Owners Name		
Owners Address		
Owners Telephone		
Owners Representative		
Contractors Name, Address, and MHIC#		
Type of Service		
Residential (# EDUs)	1	1
Multi Family (# EDUs)		
Commerical (# EDUs)		
Allocation (GPD)		
Service Size (in.)	1.5"	6"
Fees		
Benfit Charge (User Fee per EDU)	$8,550.00	$13,500.00
Connection Fee (per Application)	$1,000.00	see Water Connection Fee
EDUs	1	1
Total Fees	$9,550.00	$13,500.00
Connection Fee Detail	$1,000 flat fee per application	$1,000 flat fee per application
Date Fee Paid / Supervisor		
Applicants Signature		
Date		
Approval Signature		
Date		
For Town Staff Only		
Date Installed and Name of Foreman		
Meter Number / Serial Number / RTU		
Service Connection Date		
Book / Sequence #		
Superindendent Approval		
Std Service Size	1.5"	6"

APPENDIX A

DETAIL DRAWINGS INDEX

No. Description

1. Pipe Bedding
2. Concrete Encasement
3. Lawn Restoration
4. Pavement Restoration (State, County, and Township Roads)
5. Typical Sewer Lateral Connection
6. Casing
7. Manhole
8. Manhole Base Flow Channels
9. Manhole Frame and Cover
10. Sewer Connection to Existing Manhole
11. Pipe Repair or New Connection
12. Force Main to Manhole Connection
13. Joint Restraint for Force Mains
14. Thrust Blocks for Bends
15. Thrust Blocks for Tees, Caps, and Plugs
16. Air Vacuum Relief Manhole
17. Low Pressure Sewer Valve and Cleanout Manhole
18. Low Pressure Sewer Typical Lateral Connection
19. Valve Box
20. Pump station Bypass Connection
21. Fence and Gate

NOTE:
BACKFILL TO BE COMPACTED IN 8" LAYERS (6" LAYERS FOR STATE ROADS) TO 95% OF MAXIMUM DENSITY AS DETERMINED BY ASTM D 1557-70 OR AASHTO T-180, METHOD D (MODIFIED PROCTOR)

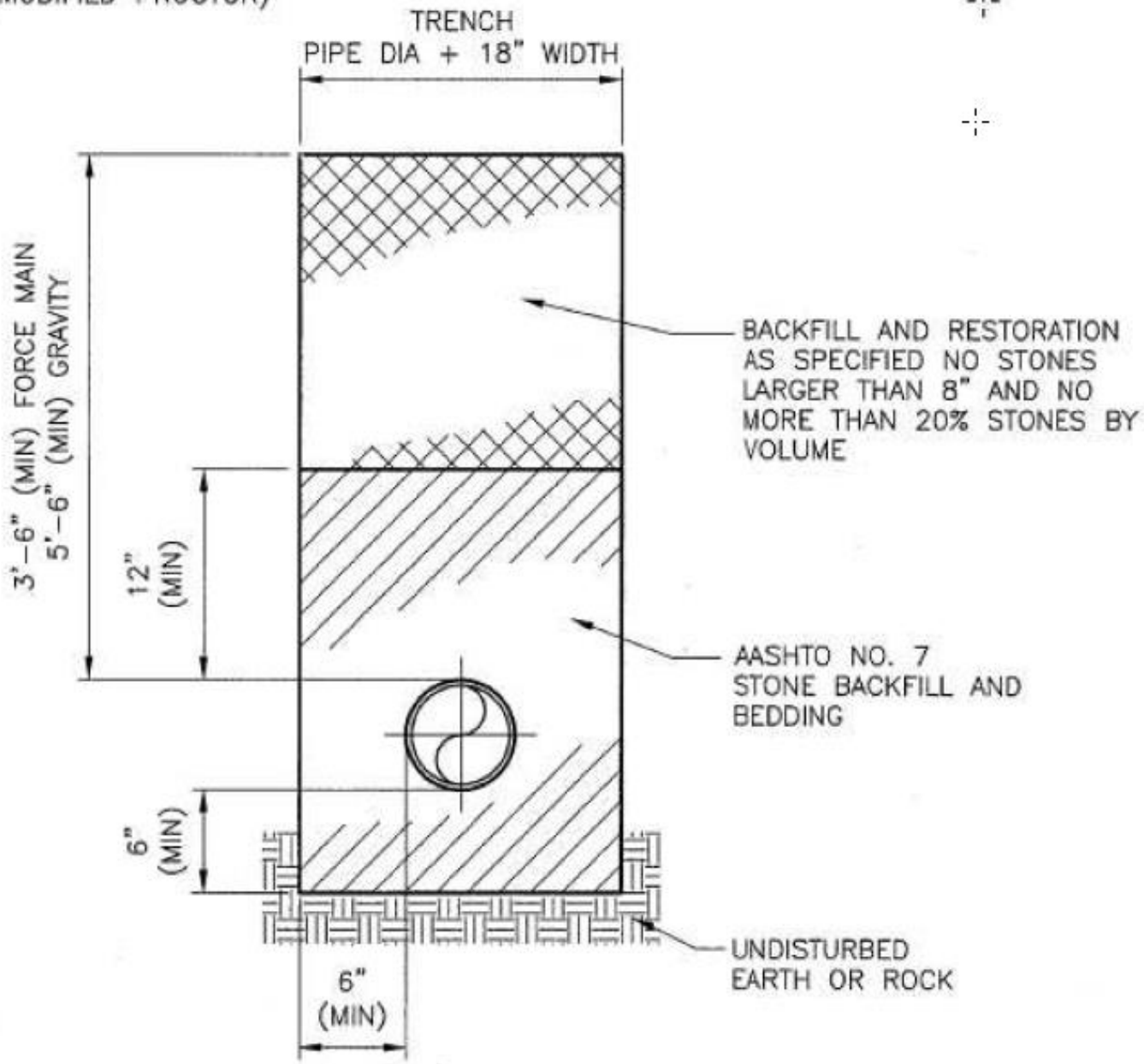

PIPE BEDDING DETAIL

NO SCALE

BOONSBORO Maryland

Department of Planning, Zoning, and Engineering
21 N. Main St. Boonsboro MD 21713

Design: BH
Drawn By: BH
Reviewed By: PL
Date: 1/4/17
Rev. __
Rev. __
Rev. __

Detail 1
Pipe Bedding

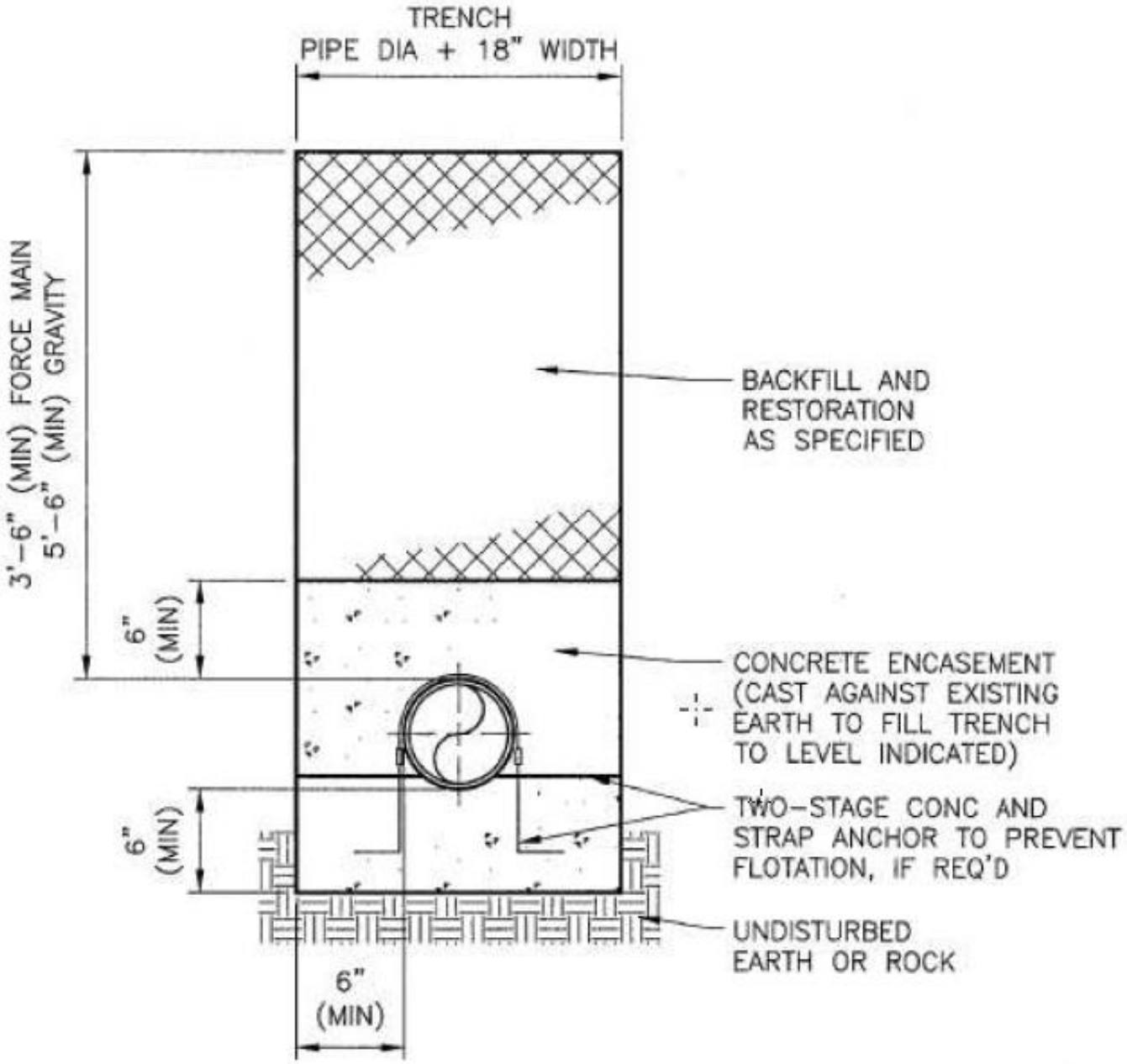

CONCRETE ENCASEMENT DETAIL

NO SCALE

BOONSBORO Maryland

Department of Planning, Zoning, and Engineering
21 N. Main St. Boonsboro MD 21713

Design: BH
Drawn By: BH
Reviewed By: PL
Date: 1/11/17
Rev. ___
Rev. ___
Rev. ___

Detail 2
Concrete Encasement

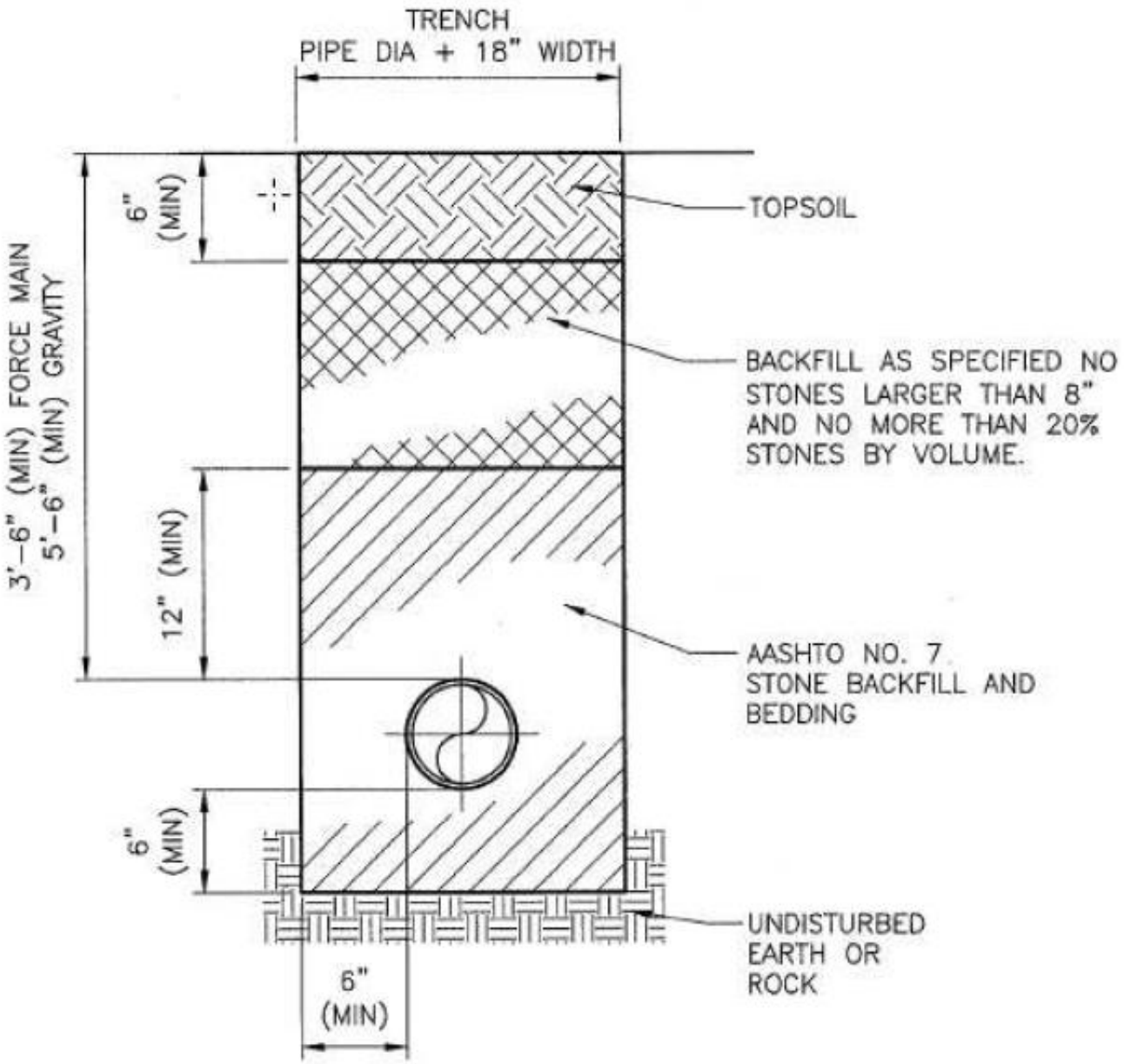

BOONSBORO Maryland

Department of Planning, Zoning, and Engineering
21 N. Main St. Boonsboro MD 21713

Design: BH
Drawn By: BH
Reviewed By: PL
Date: 1/11/17
Rev. ___
Rev. ___
Rev. ___

Detail 3
Lawn Restoration

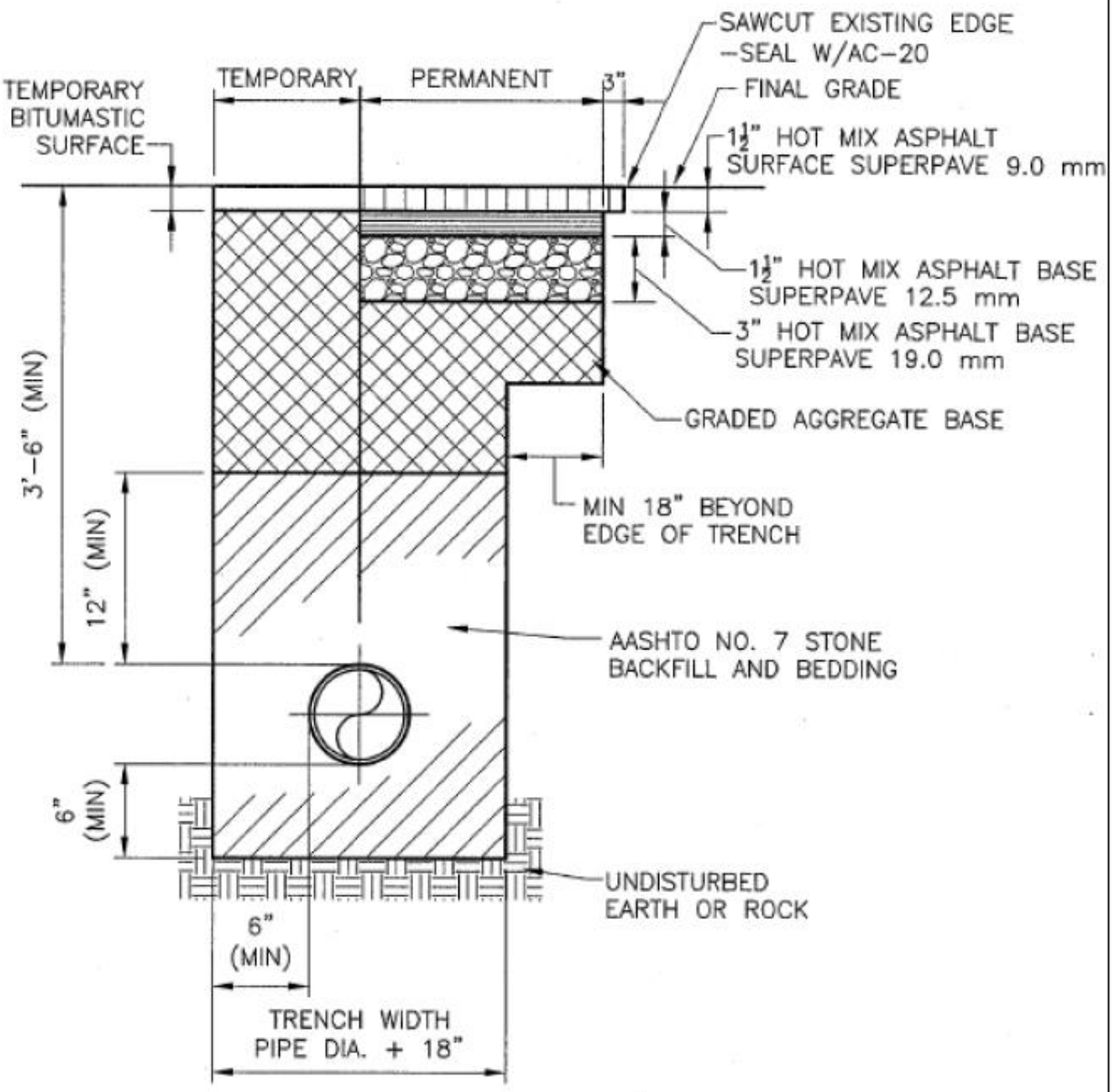

BOONSBORO Maryland

Department of Planning, Zoning, and Engineering
21 N. Main St. Boonsboro MD 21713

Design: BH
Drawn By: BH
Reviewed By: PL
Date: 1/10/17
Rev. __
Rev. __
Rev. __

Detail 4
Pavement Restoration

NOTE:
LATERALS FOR HOUSE CONNECTIONS SHALL BE 6" MIN.

COMMERCIAL CONNECTIONS MAY BE REQUIRED TO HAVE MONITORNG MANHOLE IN LIEU OF CLEANOUT

ONE FITTING MAY BE USED TO CHANGE THE VERTICAL ALIGNMENT IF NEEDED (45 DEGREES MAX.)

DROP CONNECTIONS WITH A WYE IN THE CLEANOUT STACK REQUIRE APPROVAL FROM THE TOWN

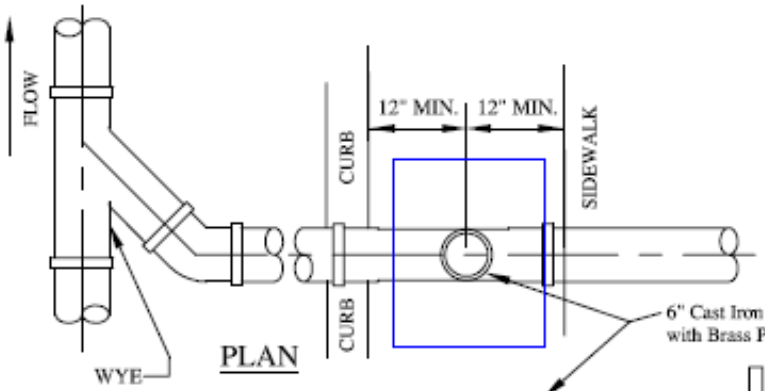

PLAN

6" Cast Iron Cleanout
with Brass Plug set Flush to Finished Grade

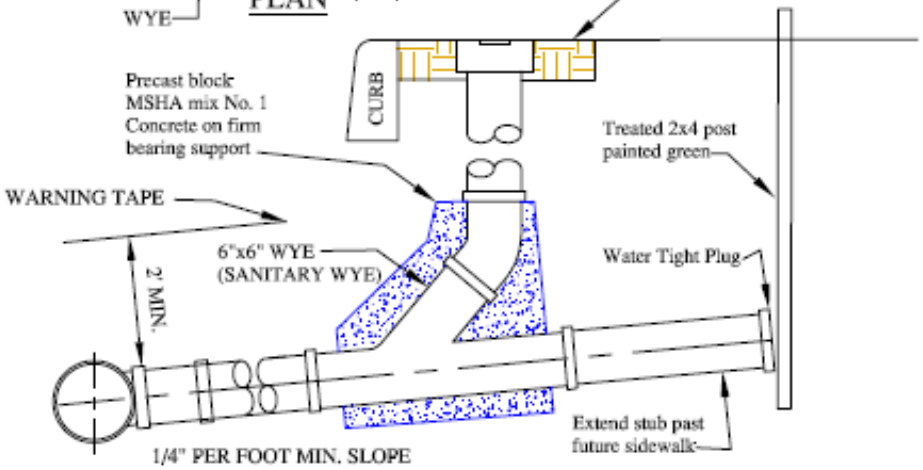

ELEVATION

N.T.S.

TYPICAL LATERAL CONNECTION

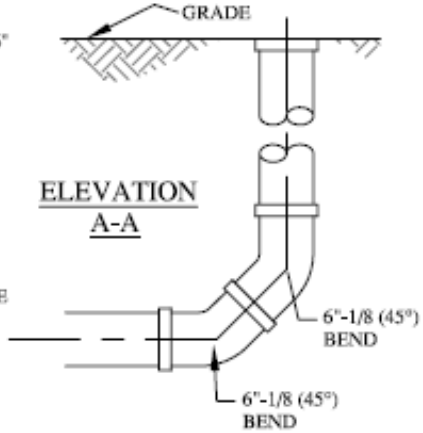

ELEVATION
A-A

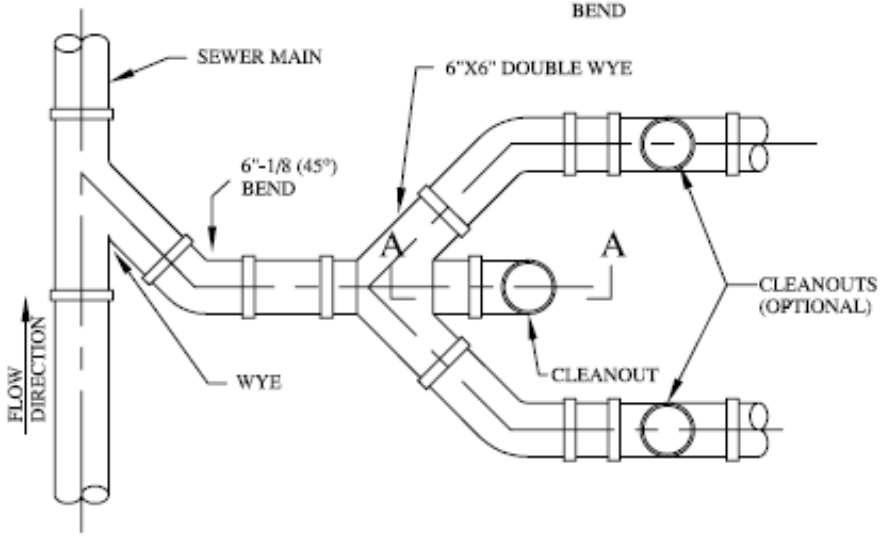

DOUBLE LATERAL AS APPLICABLE - I.E. TOWNHOMES

BOONSBORO Maryland

Department of Planning, Zoning, and Engineering
21 N. Main St. Boonsboro MD 21713

Design: BH
Drawn By: BH
Reviewed By: PL
Date: 1/10/17
Rev. __
Rev. __
Rev. __

Detail 5
Typical Sewer Lateral Connections

PIPE INSULATOR SHALL CENTER THE CARRIER PIPE & FIT TO RESTRAIN AGAINST MOVEMENT

NOMINAL DIAMETER (INCHES)

CARRIER PIPE	CASING PIPE
8"	18"
10"	20"
12"	24"

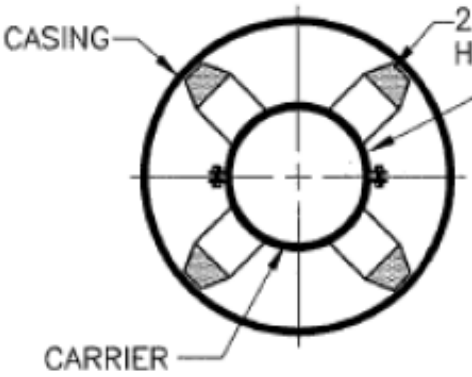

SECTION

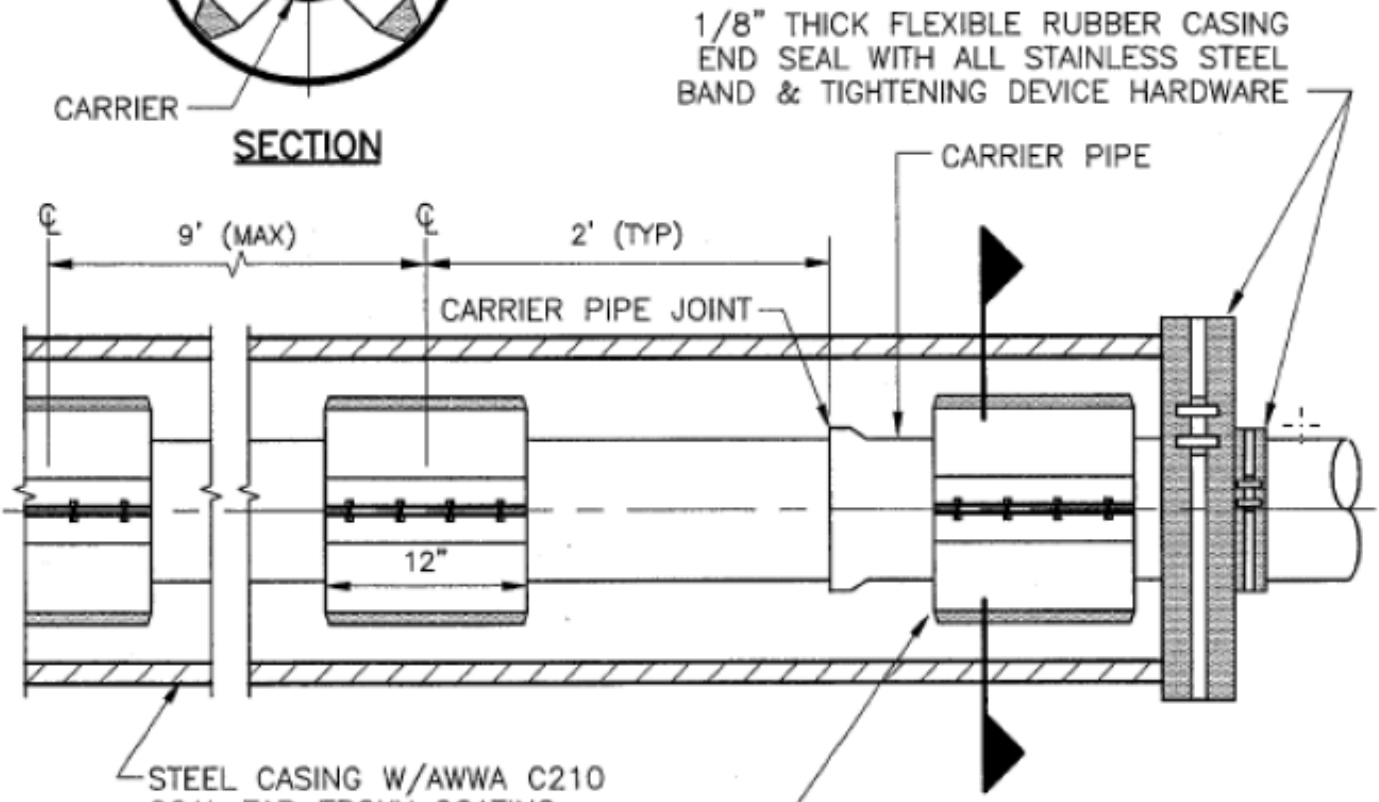

PROFILE

NOTES:

1. CASING PIPE SHALL CONFORM TO AWWA C200. WELD JOINTS SHALL BE CONTINUOUS & WATERTIGHT. PIPE SHALL BE A139 GRADE 36.

2. WALL THICKNESS FOR ALL CASING SIZES SHALL BE STANDARD 0.375 INCH MIN.

3. FOR PIPES CROSSING STATE ROADS OR RAILROADS ADDITIONAL REQUIREMENTS (IF ANY) IMPOSED BY HIGHWAY OR RAILROAD OWNER MUST BE MET.

BOONSBORO Maryland

Department of Planning, Zoning, and Engineering
21 N. Main St. Boonsboro MD 21713

Design: BH
Drawn By: BH
Reviewed By: PL
Date: 1/10/17
Rev. ___
Rev. ___
Rev. ___

Detail 6
Casing

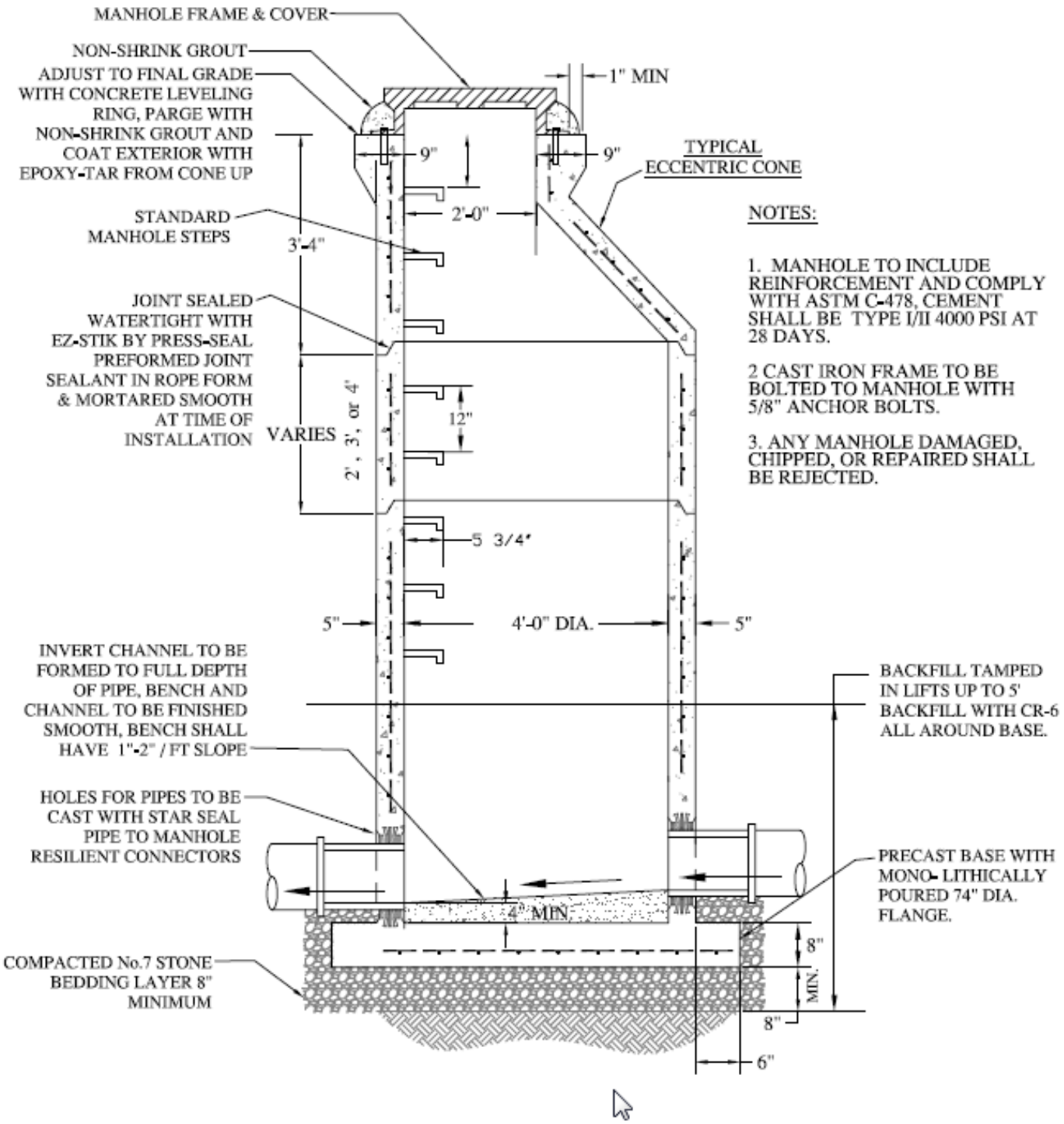

NOTES:

1. MANHOLE TO INCLUDE REINFORCEMENT AND COMPLY WITH ASTM C-478, CEMENT SHALL BE TYPE I/II 4000 PSI AT 28 DAYS.

2 CAST IRON FRAME TO BE BOLTED TO MANHOLE WITH 5/8" ANCHOR BOLTS.

3. ANY MANHOLE DAMAGED, CHIPPED, OR REPAIRED SHALL BE REJECTED.

BOONSBORO Maryland

Department of Planning, Zoning, and Engineering
21 N. Main St. Boonsboro MD 21713

Design: BH
Drawn By: BH
Reviewed By: PL
Date: 1/10/17
Rev. __
Rev. __
Rev. __

Detail 7
Manhole

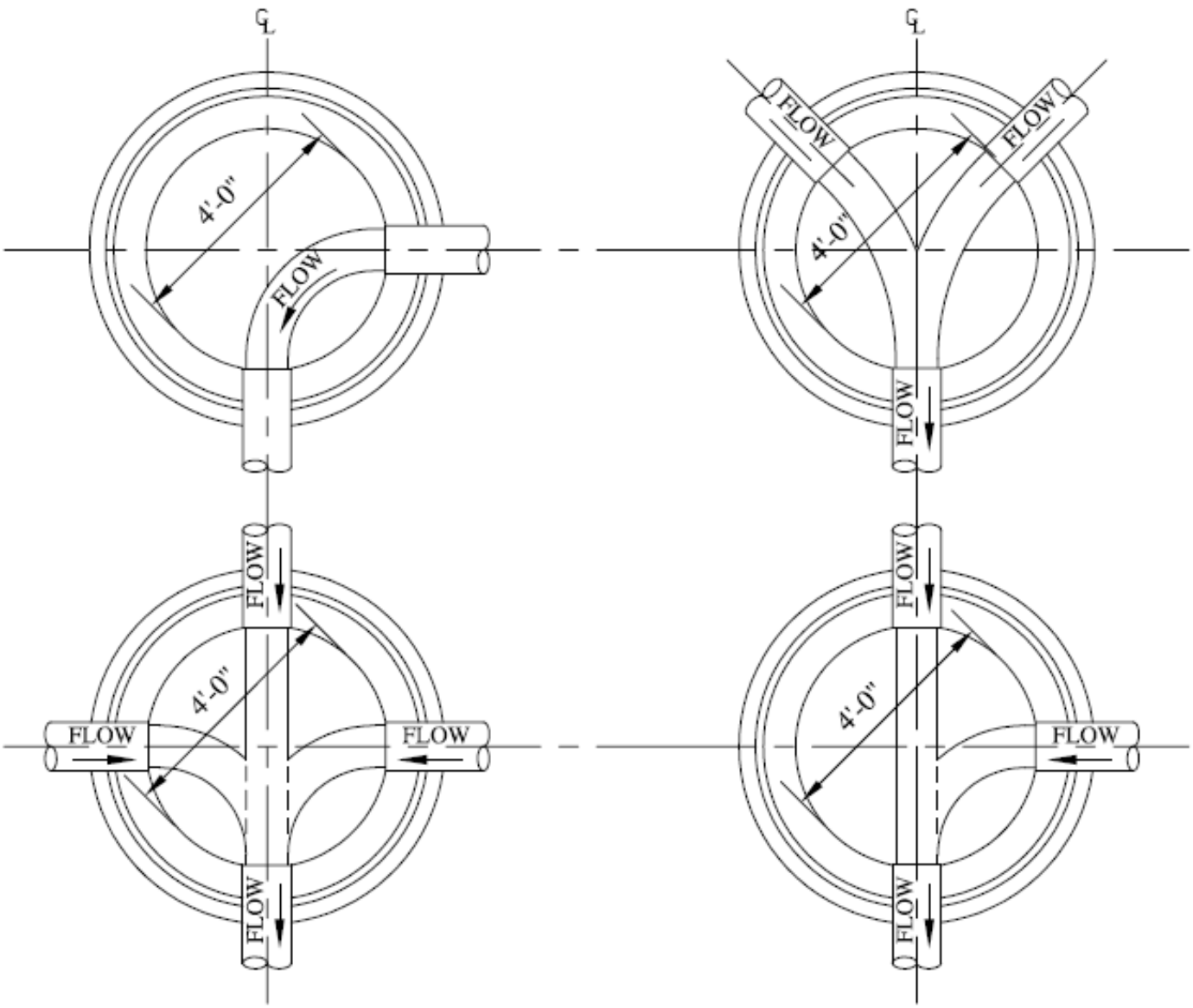

NOTES:

BENCH SHALL HAVE A MIN1"/FT AND MAX 2"/FT SLOPE TOWARD THE FLOW CHANNEL.

THE RADIUS OF THE CURVE OF ALL FLOW CHANNELS IS TO BE AS LARGE AS POSSIBLE.

FORM CHANNEL TO THE FULL DEPTH OF THE PIPE AND PROVIDE SMOOTH FINISH.

PROVIDE CAST-IN-PLACE RESILIENT CONNECTORS PER ASTM C 923 AT PIPE PENETRATIONS. AFTER PIPE INSTALLATION FILL ANNULAR SPACE AT PIPE CONNECTIONS WITH EPOXY MORTAR AND PROVIDE NEAT AND SMOOTH FINISH TO WALLS AND BASE.

BOONSBORO Maryland

Department of Planning, Zoning, and Engineering
21 N. Main St. Boonsboro MD 21713

Design: BH
Drawn By: BH
Reviewed By: PL
Date: 1/10/17
Rev. __
Rev. __
Rev. __

Detail 8
Manhole Base Flow Channels

MH Cover

EJ Model 1544C

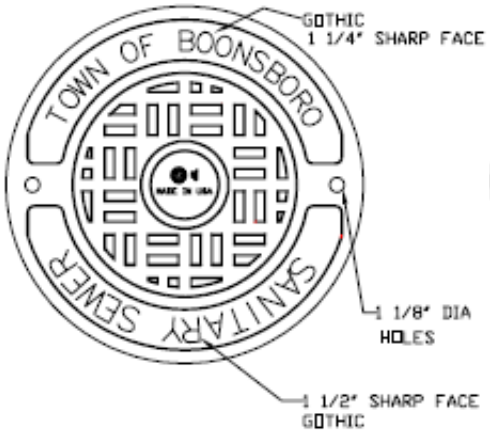

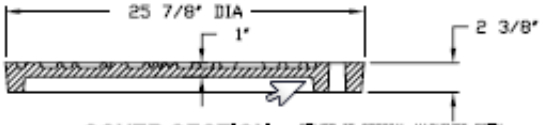

COVER SECTION COVER IS SPECIAL MACHINED FROM 2 1/2" DOWN TO 2 3/8"

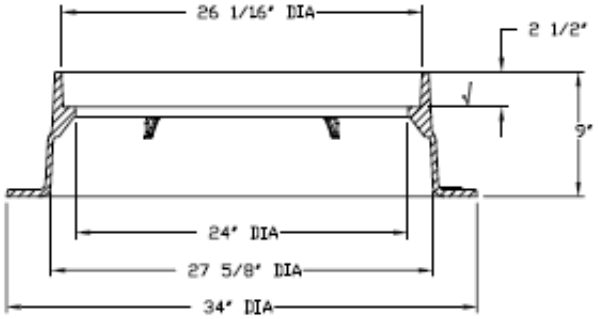

FRAME SECTION

MH Frame

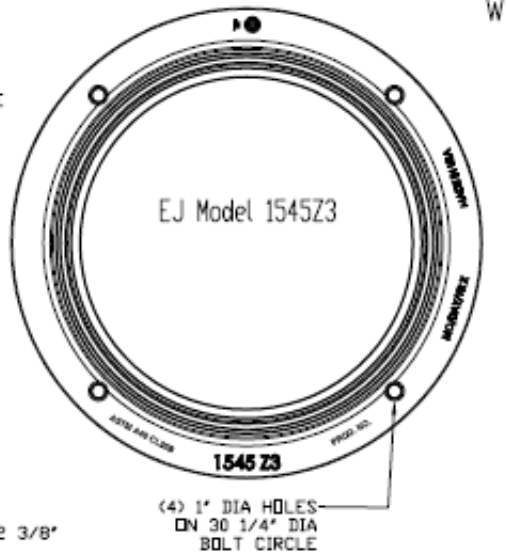

NOTES:

Materials: Gray Iron (CL35B)

Design Load: Heavy Duty HS-25

Certification: ASTM A48

County of Origin: USA

Anti-Inflow Manhole Dishes (Parsons Environmental) or equivalent required on all Manholes.

Water Tight MH Frame and Cover

EJ Model 545A1GS

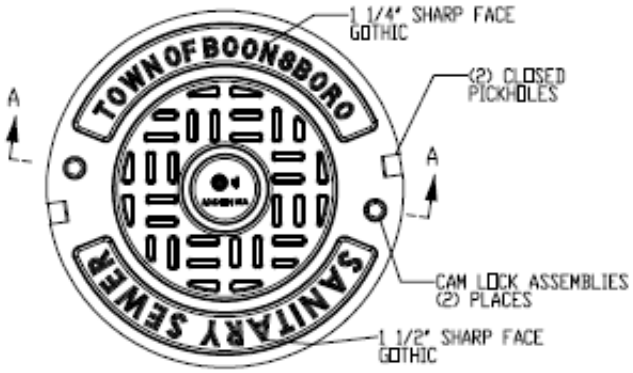

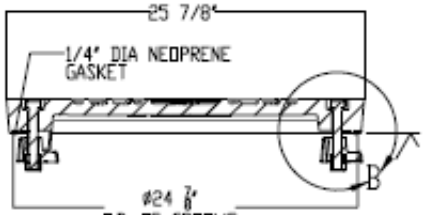

SECTION A-A

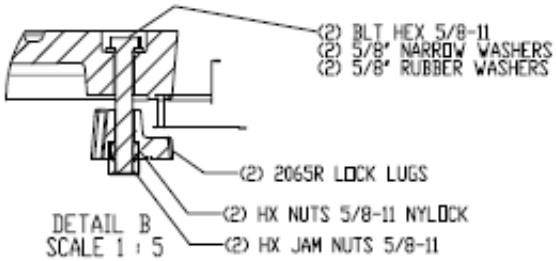

DETAIL B
SCALE 1 : 5

BOONSBORO Maryland

Department of Planning, Zoning, and Engineering
21 N. Main St. Boonsboro MD 21713

Design: BH
Drawn By: BH
Reviewed By: PL
Date: 1/10/17
Rev.
Rev.
Rev.

Detail 9
Manhole Frame and Cover

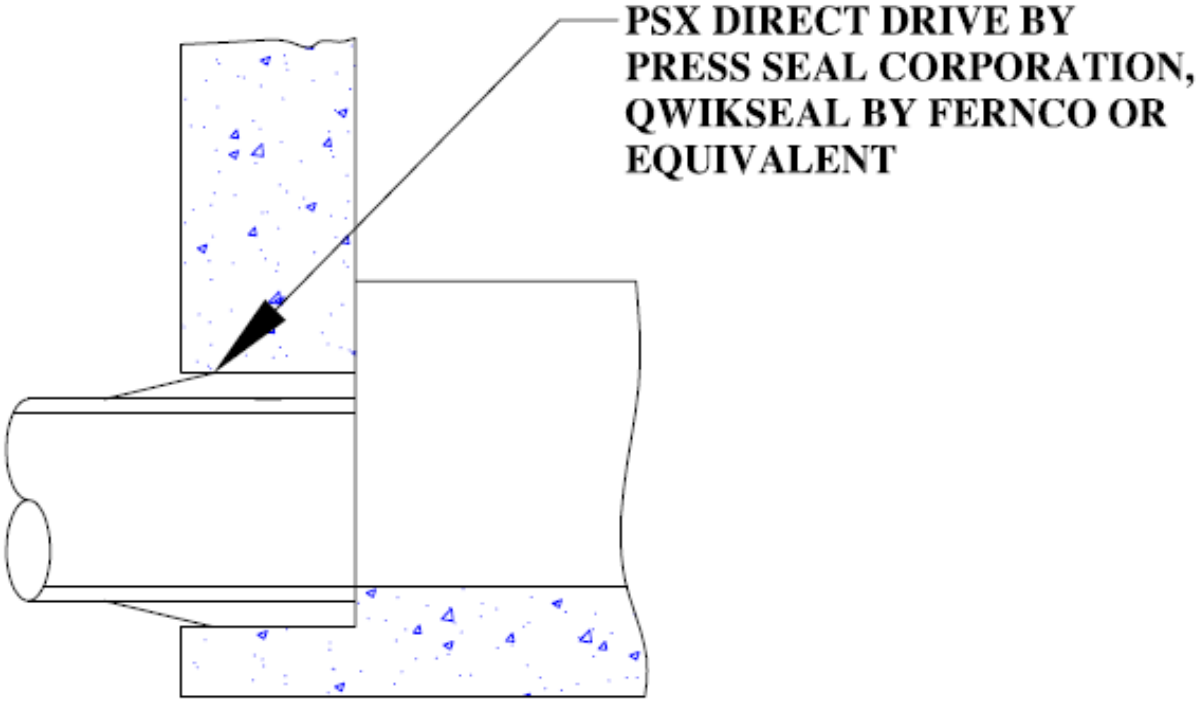

NEW SEWER TO EXISITING MANHOLE

NOTE:

CONNECTION IS SHOWN WITH STANDARD PRECAST MANHOLE BASES.

CAREFULLY CORE DRILL HOLE AND PREPARE FOR CONNECTOR.

AFTER PIPE INSERTION, PARGE AROUND FINISHED CONNECTION WITH EPOXY MORTAR.

BOONSBORO Maryland
Department of Planning, Zoning, and Engineering
21 N. Main St. Boonsboro MD 21713

Design: BH
Drawn By: BH
Reviewed By: PL
Date: 1/10/17
Rev. __
Rev. __
Rev. __

Detail 10
Sewer Connection to Manhole

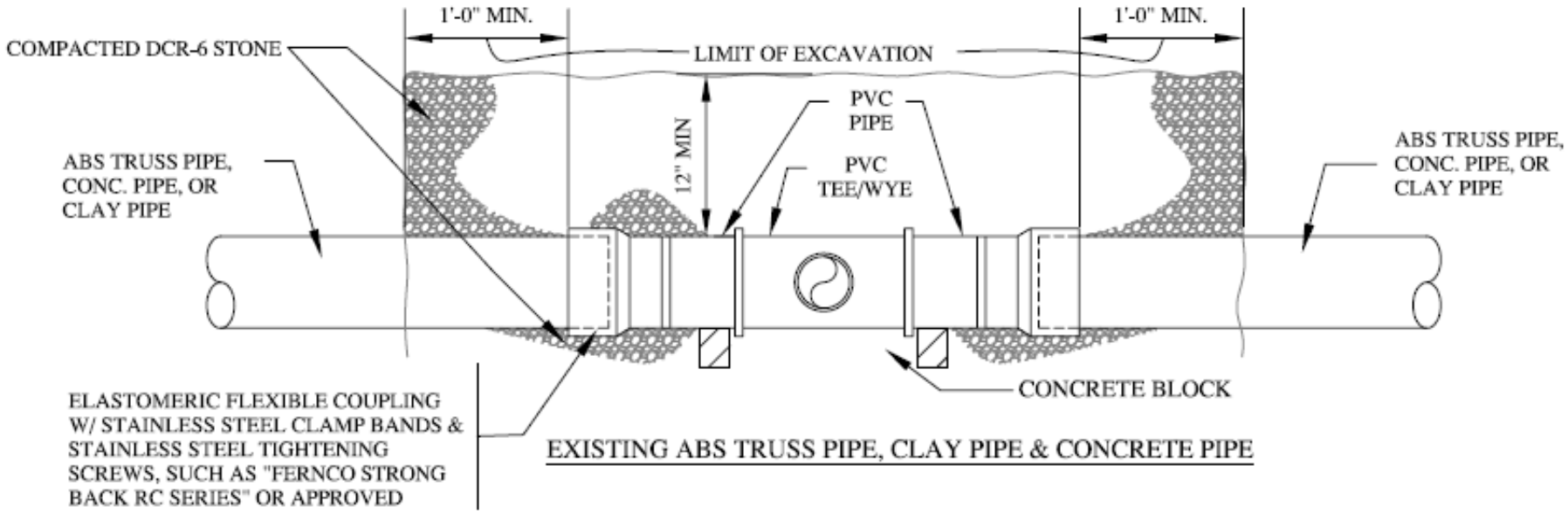

EXISTING ABS TRUSS PIPE, CLAY PIPE & CONCRETE PIPE

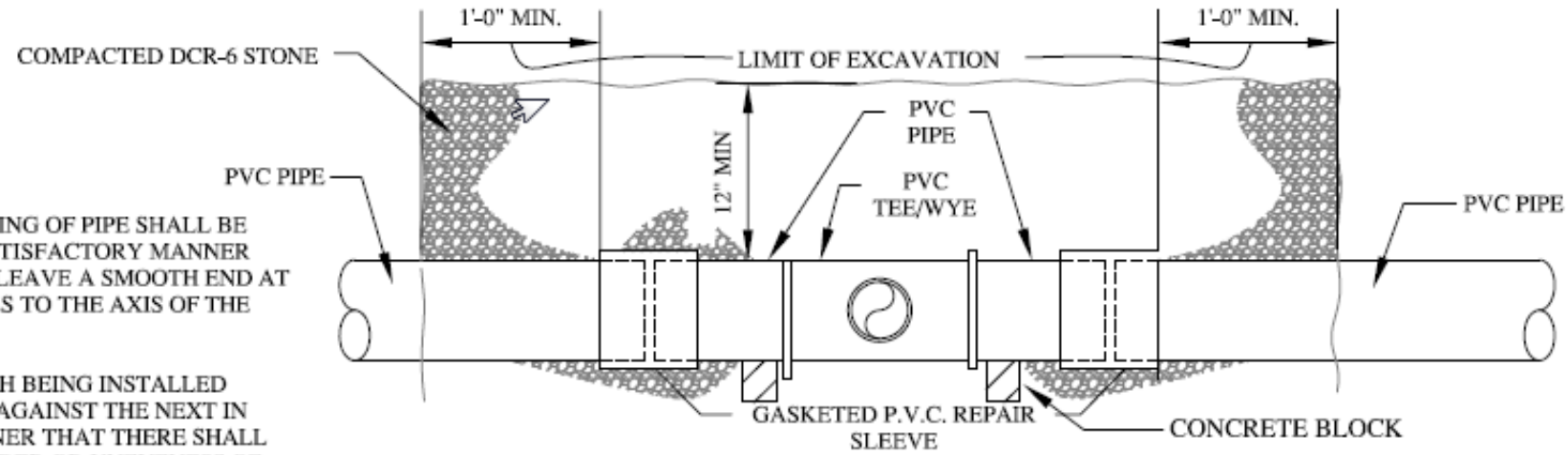

EXISTING PVC PIPE

NOTES:

1. FIELD CUTTING OF PIPE SHALL BE DONE IN A SATISFACTORY MANNER WHICH WILL LEAVE A SMOOTH END AT RIGHT ANGLES TO THE AXIS OF THE PIPE.

2. PIPE LENGTH BEING INSTALLED SHALL ABUT AGAINST THE NEXT IN SUCH A MANNER THAT THERE SHALL BE NO SHOULDER OR UNEVENESS OF ANY KIND ALONG INSIDE OF THE PIPE.

BOONSBORO Maryland

Department of Planning, Zoning, and Engineering
21 N. Main St. Boonsboro MD 21713

Design: BH
Drawn By: BH
Reviewed By: PL
Date: 1/10/17
Rev. __
Rev. __
Rev. __

Detail 11
Pipe Repair or New Connection

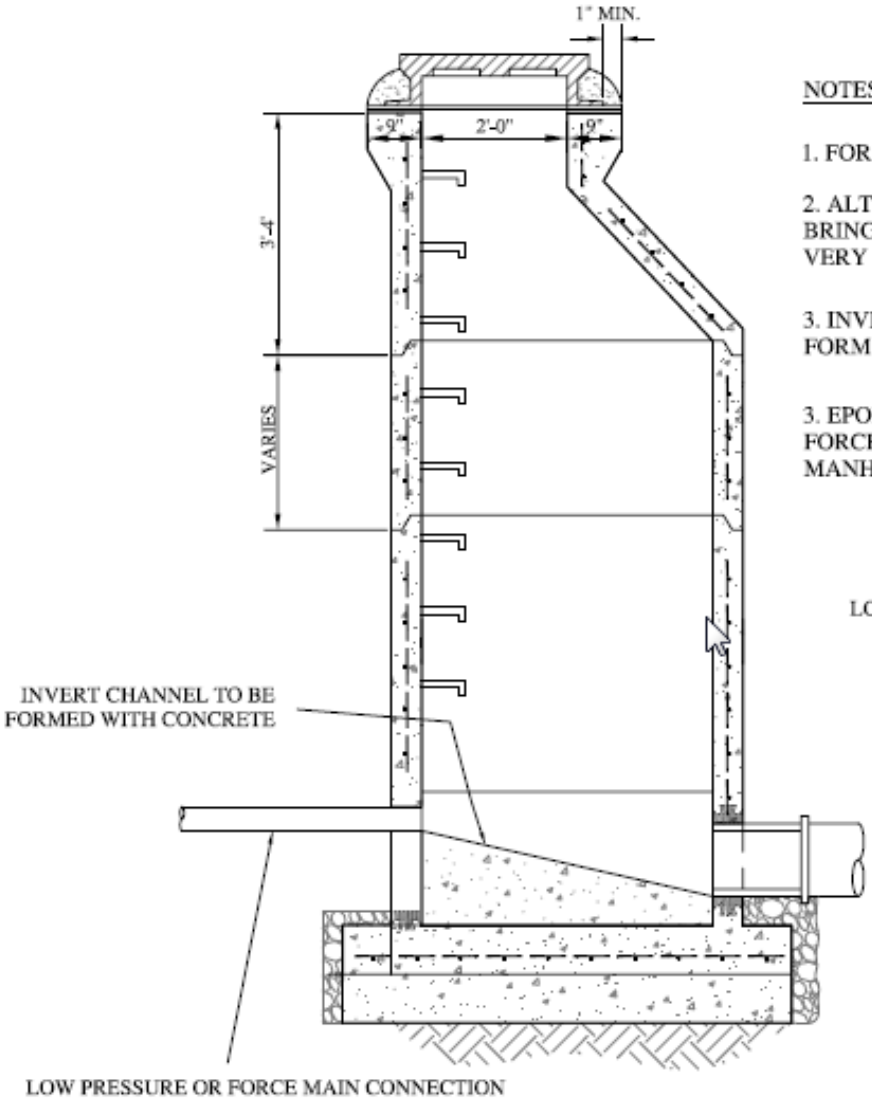

NOTES:

1. FOR STRUCTURE OF MANHOLE SEE MH DETAIL

2. ALTERNATE CONNECTION USING 2-45° BENDS TO BRING FORCE MAIN DOWN FROM 4' MIN. DEPTH TO VERY DEEP MANHOLE.

3. INVERT CHANNEL TO BE FORMED WITH CONCRETE FORM CHANNEL TO THE FULL DEPTH OF PIPE.

3. EPOXY COATING OR HDPE LINING REQUIRED ON FORCEMAIN RECEIVING MANHOLES AND THE NEXT MANHOLE DOWNSTREAM.

LOW PRESSURE OR FORCE MAIN CONNECTION

BOONSBORO Maryland

Department of Planning, Zoning, and Engineering
21 N. Main St. Boonsboro MD 21713

Design: BH
Drawn By: BH
Reviewed By: PL
Date: 1/10/17
Rev. __
Rev. __
Rev. __

Detail 12
Forcemain to Manhole Connection

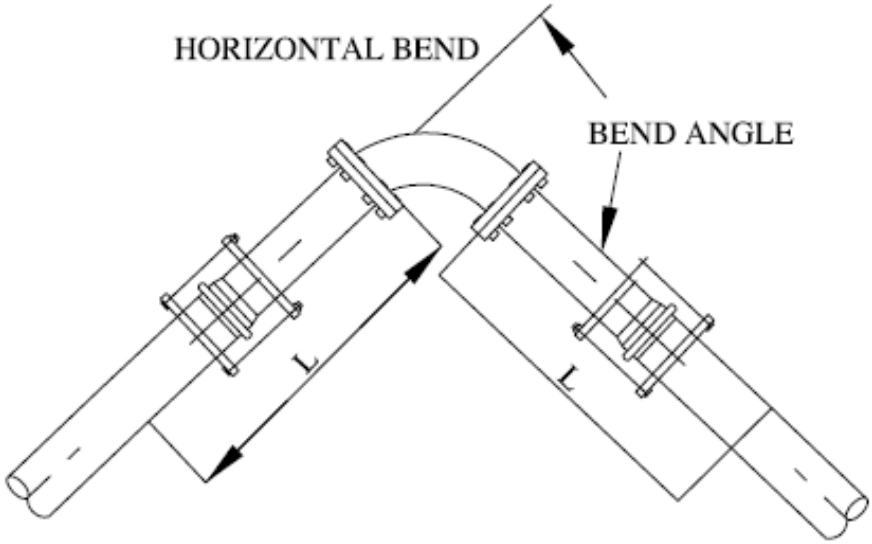

PIPE SIZE

	4	6	8	10
11.25°	22	22	22	22
22.5°	22	22	22	22
45°	22	22	22	30
90°	30	44	50	80

RESTRAINED LENGTHS "L" IN FEET

VERTICAL BEND

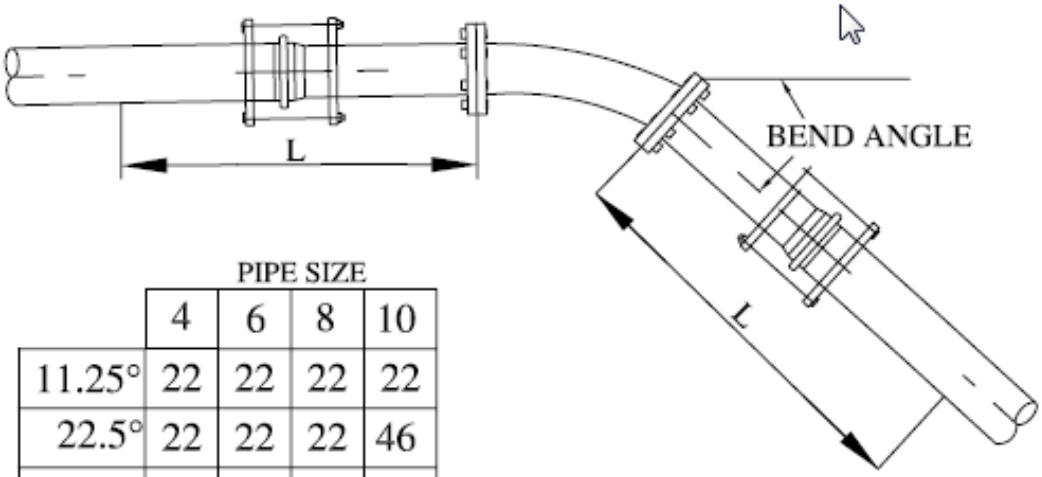

PIPE SIZE

	4	6	8	10
11.25°	22	22	22	22
22.5°	22	22	22	46
45°	30	40	60	80

RESTRAINED LENGTHS "L" IN FEET

BOONSBORO Maryland

Department of Planning, Zoning, and Engineering
21 N. Main St. Boonsboro MD 21713

Design: BH
Drawn By: BH
Reviewed by: PL
Date: 1/10/17
Rev. __
Rev. __
Rev. __

Detail 13
Joint Restraint for Force Mains

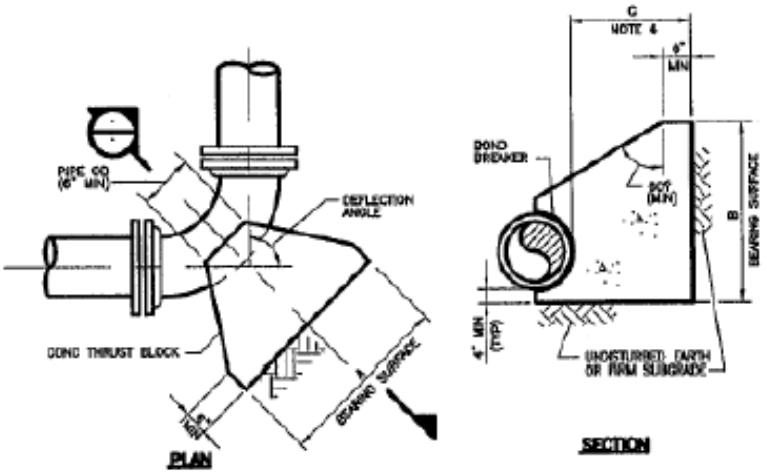

DETAIL FOR HORIZONTAL BENDS

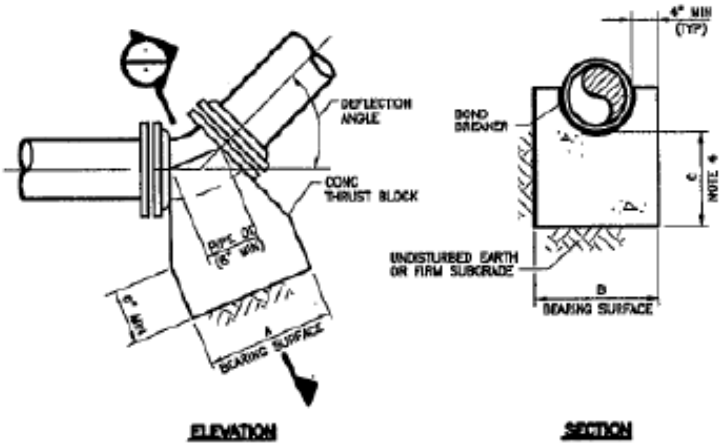

DETAIL FOR LOWER VERTICAL BENDS

NOMINAL PIPE SIZE (INCHES)	MAXIMUM PIPE OD (INCHES)	REQUIRED BEARING AREA (SQ FT)					
		90 DEG	60 DEG	45 DEG	30 DEG	22.50 DEG	11.25 DEG
3	3.96	2.0	1.4	1.1	0.7	0.5	0.3
4	4.80	2.8	2.0	1.6	1.1	0.8	0.4
6	6.90	6	4	3	2.2	1.6	0.8
8	9.05	10	7	6	4	3	1.4
10	11.10	15	11	8	5	4	2.1
12	13.20	22	15	12	8	6	3
14	15.30	29	21	16	11	8	4
16	17.40	38	27	20	14	10	5
18	19.50	48	34	26	17	13	7
20	21.60	58	41	32	21	16	8
24	25.80	83	59	45	30	23	12
30	32.00	128	90	69	47	35	18
36	38.30	183	130	99	67	51	25

NOTES:
1. MAXIMUM TEST PRESURE = 1.5 x 150 PSI
2. MINIMUM ALLOWABLE SOIL BEARING PRESSURE = 2000 PSF
3. BEARING AREA = A x B
4. C SHALL BE GREATER THAN A/2 AND B/2.

BOONSBORO Maryland

Department of Planning, Zoning, and Engineering
21 N. Main St. Boonsboro MD 21713

Design: BH
Drawn By: BH
Reviewed By: PL
Date: 1/10/17
Rev. __
Rev. __
Rev. __

Detail 14
Thrust Blocks for Bends

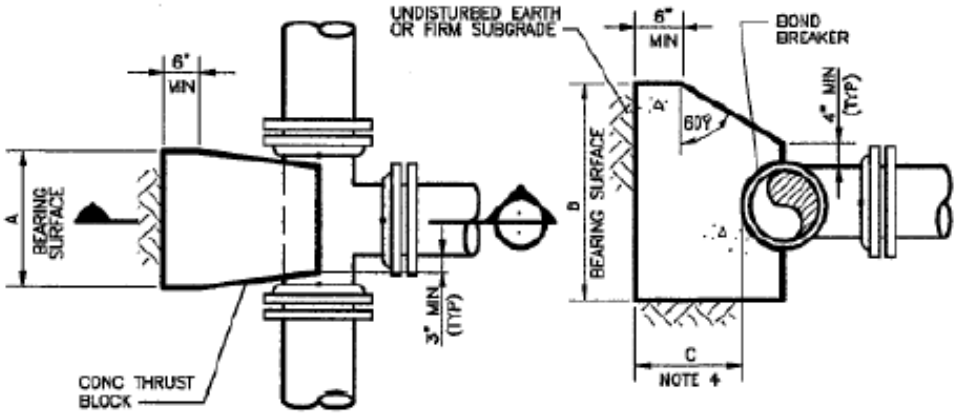

PLAN SECTION

DETAIL FOR TEES

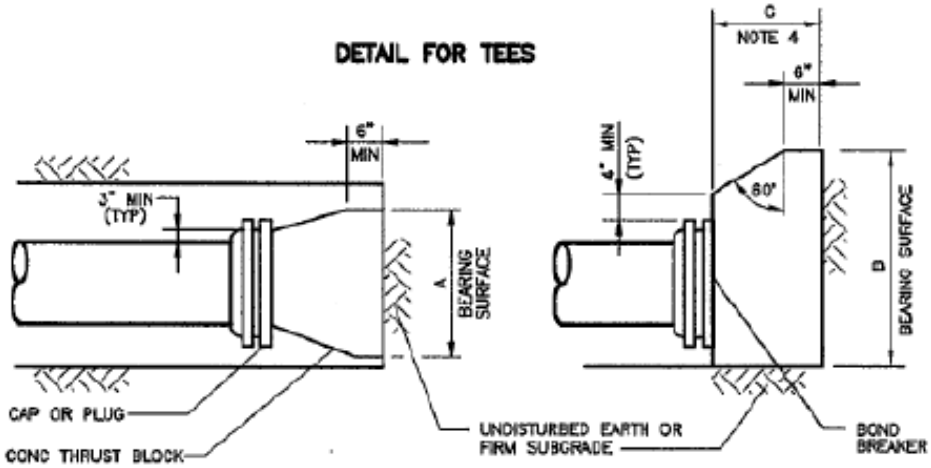

PLAN ELEVATION

DETAIL FOR CAPS OR PLUGS

NOMINAL PIPE SIZE (IN)	MAXIMUM PIPE OD (IN)	REQUIRED BEARING AREA (SQ FT)
3	3.96	1.4
4	4.80	2.0
6	6.90	4
8	9.05	7
10	11.10	11
12	13.20	15
14	15.30	21
16	17.40	27
18	19.50	34
20	21.60	41
24	25.80	60
30	32.00	90
36	38.30	130

NOTES:

1. MAXIMUM TEST PRESURE = 1.50x150 PSI
2. MINIMUM ALLOWABLE SOIL BEARING PRESSURE = 2000 PSF
3. BEARING AREA = A x B
4. C SHALL BE GREATER THAN A/2 AND B/2.

BOONSBORO Maryland

Department of Planning, Zoning, and Engineering
21 N. Main St. Boonsboro MD 21713

Design: BH
Drawn By: BH
Reviewed By: PL
Date: 1/10/17
Rev. ___
Rev. ___
Rev. ___

Detail 15
Thrust Block - Tees, Caps, Bends

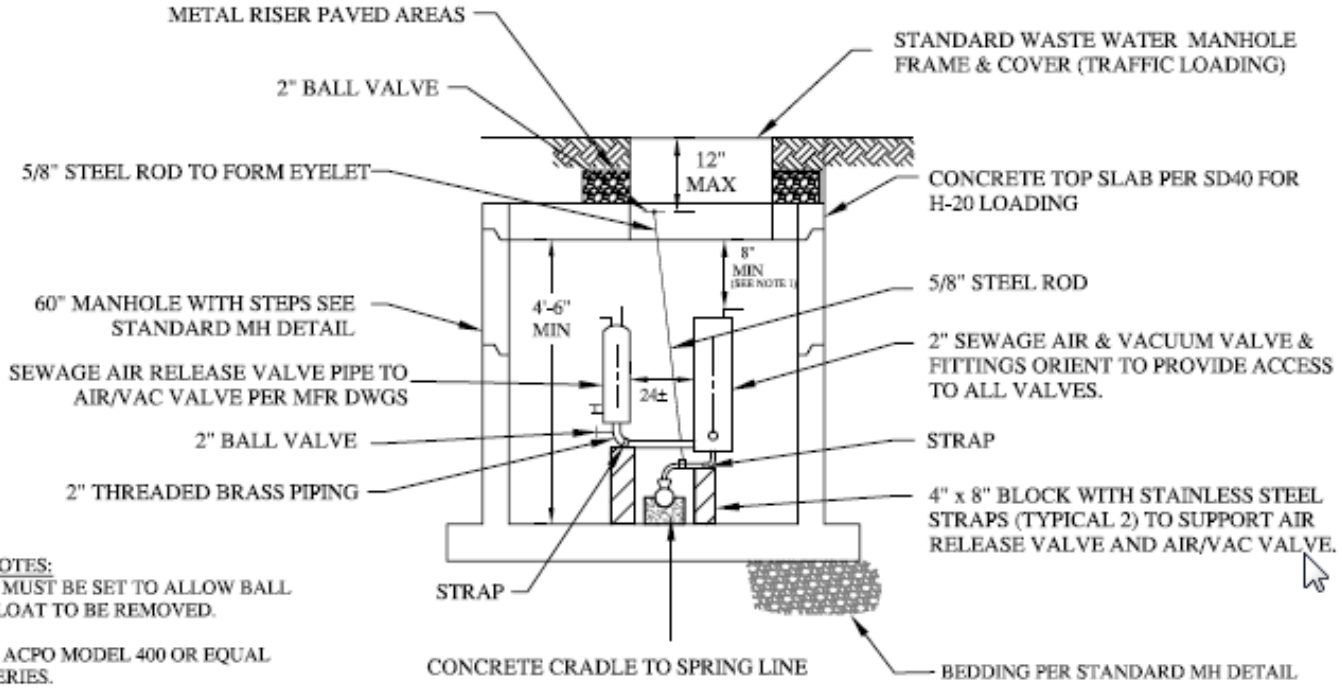

NOTES:
1. MUST BE SET TO ALLOW BALL FLOAT TO BE REMOVED.

2. ACPO MODEL 400 OR EQUAL SERIES.

3. SPACERS FOR WALL MUST BE SECURED TO THE WALL.

BOONSBORO Maryland

Department of Planning, Zoning, and Engineering
21 N. Main St. Boonsboro MD 21713

Design: BH
Drawn By: BH
Reviewed By: PL
Date: 1/10/17
Rev. ___
Rev. ___
Rev. ___

Detail 16
Air and Vacuum relief Manhole

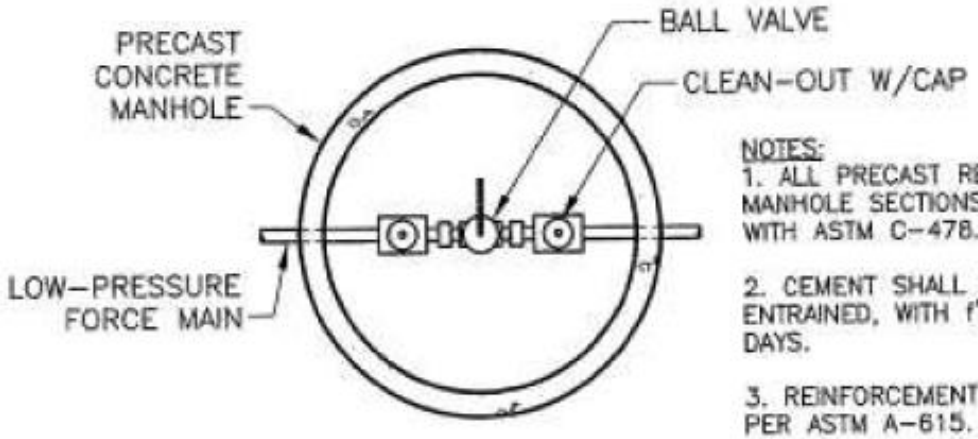

PLAN

NOTES:

1. ALL PRECAST REINFORCED CONCRETE MANHOLE SECTIONS SHALL COMPLY WITH ASTM C-478.
2. CEMENT SHALL BE TYPE II OR III, AIR ENTRAINED, WITH f'c=4,000 psi AT 28 DAYS.
3. REINFORCEMENT SHALL BE GRADE 60 PER ASTM A-615.
4. 24" DIA CAST IRON FRAME AND COVER PER ASTM A-48, CLASS 30, FOR H-20 LOADING.
5. CAST IRON FRAME TO BE BOLTED TO MANHOLE WITH ⅝" ANCHOR BOLTS.
6. CASTING AND GRADE RINGS TO BE SEALED TO MANHOLE WITH WATERPROOF MORTAR OR PREFORMED PLASTIC SEALING COMPOUND.
7. ALL JOINTS SHALL BE SEALED WITH PREFORMED PLASTIC SEALING COMPOUND.

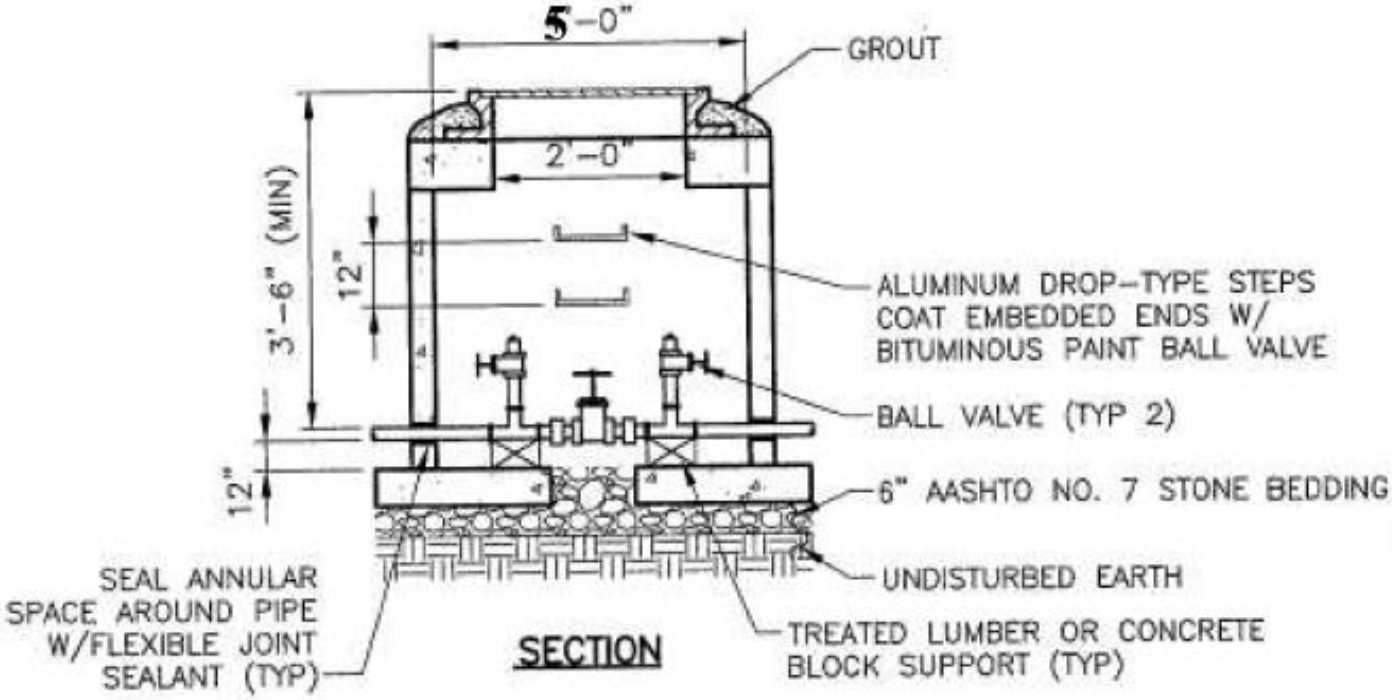

SECTION

BOONSBORO Maryland

Department of Planning, Zoning, and Engineering
21 N. Main St. Boonsboro MD 21713

Design: BH
Drawn By: BH
Reviewed By: PL
Date: 1/10/17
Rev. __
Rev. __
Rev. __

Detail 17
LPS Cleanout Manhole

NOTE:
1. ALL PE CONNECTIONS SHALL BE COMPRESSION FITTINGS UNLESS NOTED OTHERWISE.

2. PROVIDE 6" OF AASHTO NO. 7 STONE BELOW PIPE AND 12" ABOVE ENTIRE LENGTH OF PIPE.

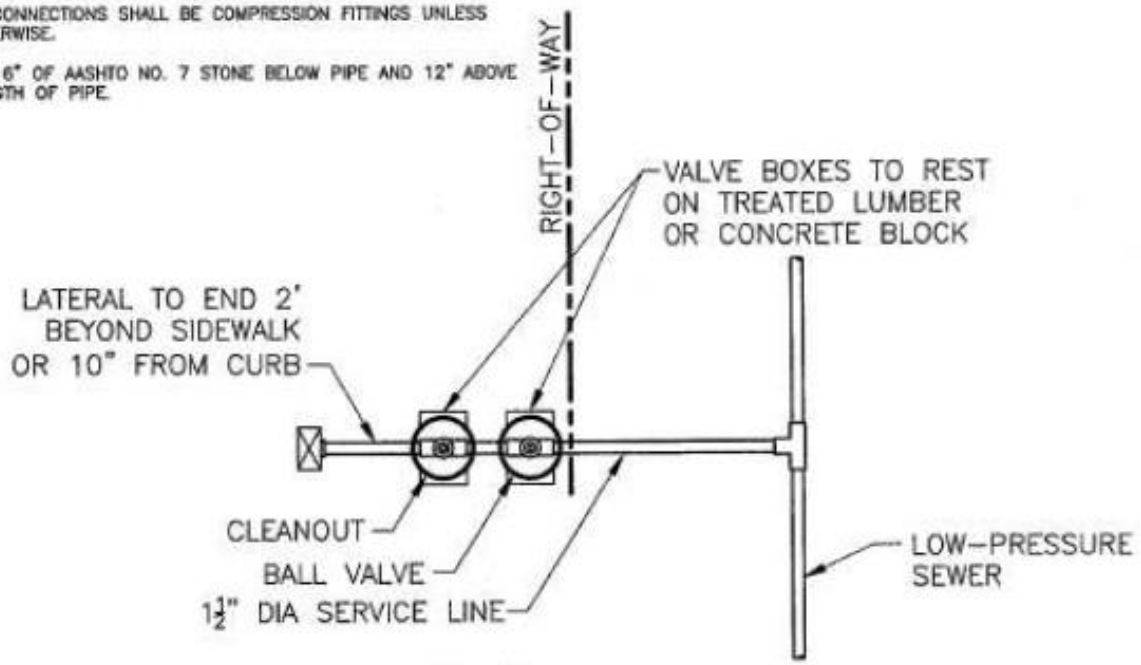

PLAN

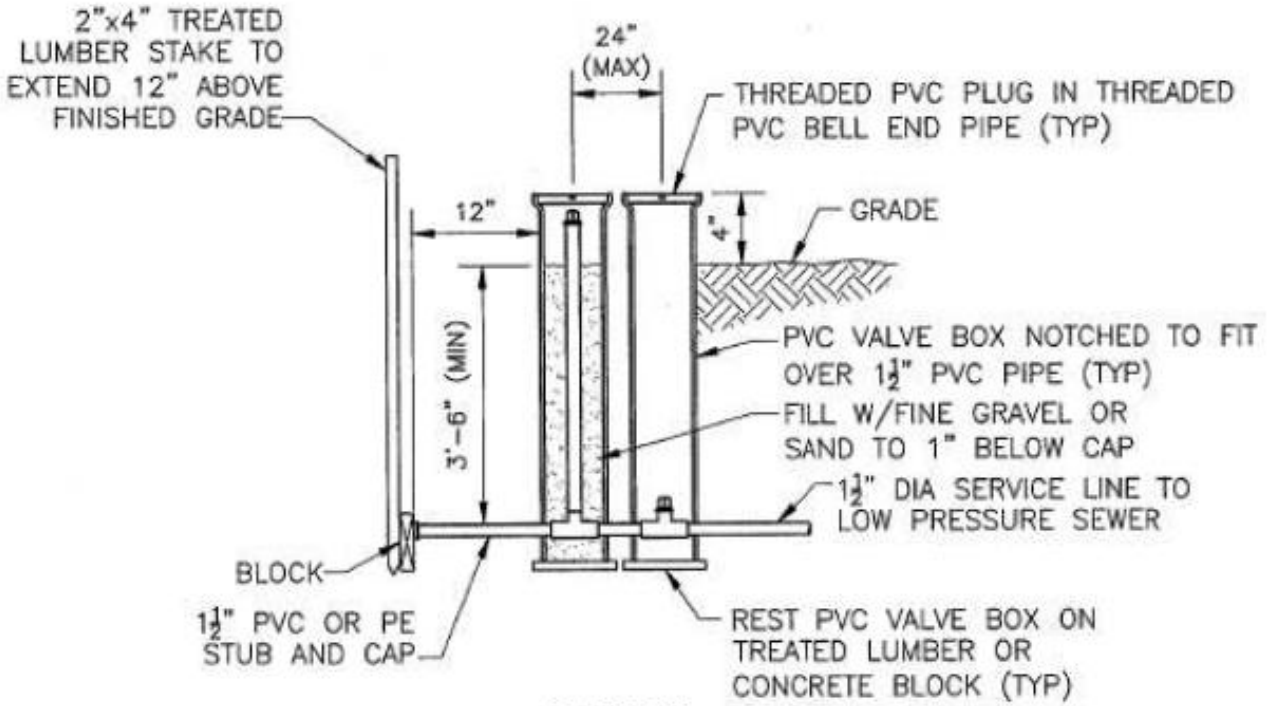

SECTION

TYPICAL LATERAL CONNECTION TO LOW-PRESSURE SEWER DETAIL

NO SCALE

BOONSBORO Maryland

Department of Planning, Zoning, and Engineering
21 N. Main St. Boonsboro MD 21713

Design: BH
Drawn By: BH
Reviewed By: PL
Date: 1/10/17
Rev. __
Rev. __
Rev. __

Detail 18
LPS Lateral Connection

NOTES:

1. ALL MATERIALS COAL TAR EPOXY COATED.

2. TOWN APPROVAL REQUIRED FOR USE OF MID-BOX EXTENSION SECTION.

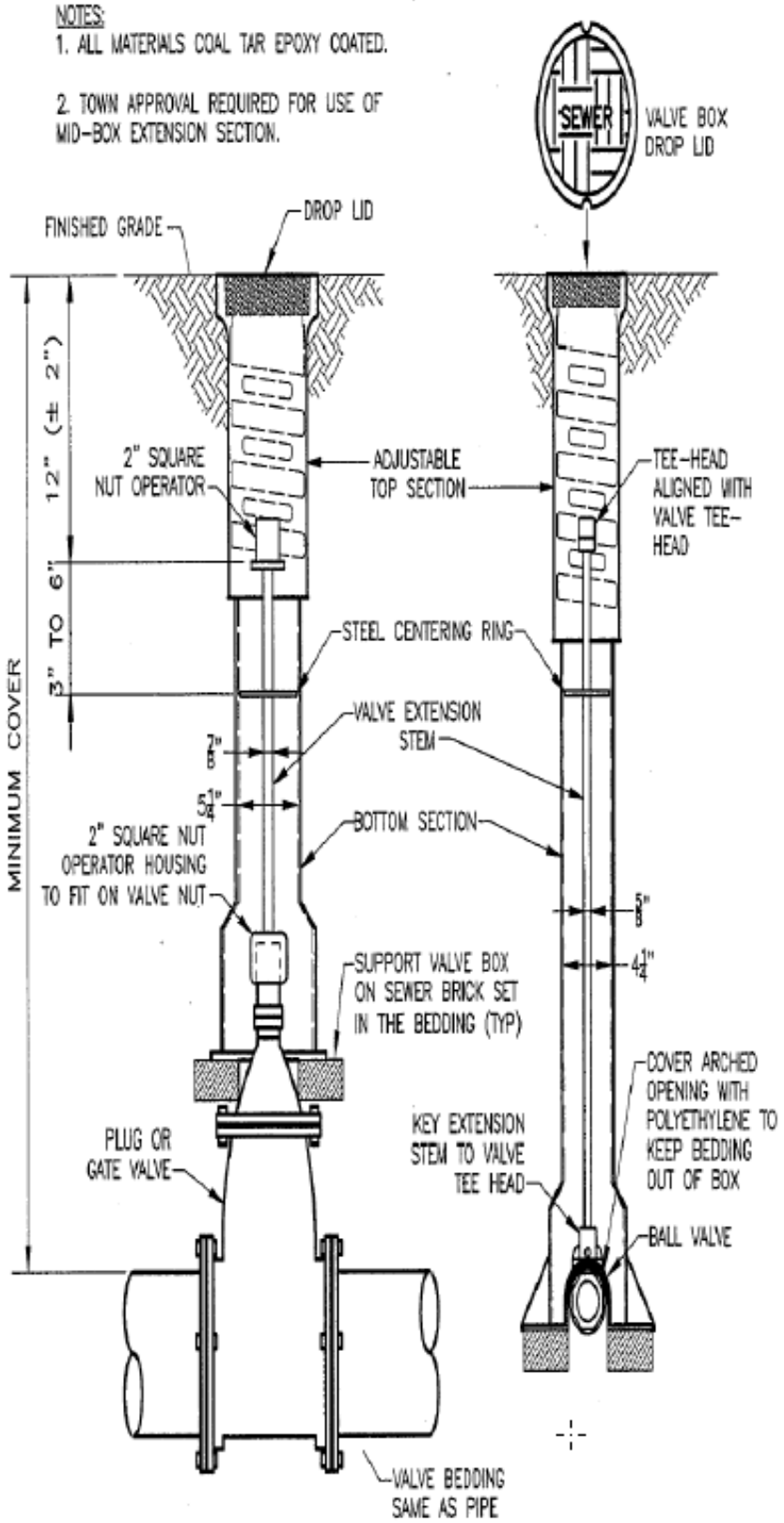

VALVE SIZE 3" & LARGER

VALVE SIZE LESS THAN 3"

BOONSBORO Maryland

Department of Planning, Zoning, and Engineering
21 N. Main St. Boonsboro MD 21713

Design: BH
Drawn By: BH
Reviewed By: PL
Date: 1/10/17
Rev. ___
Rev. ___
Rev. ___

Detail 19
Valve Box

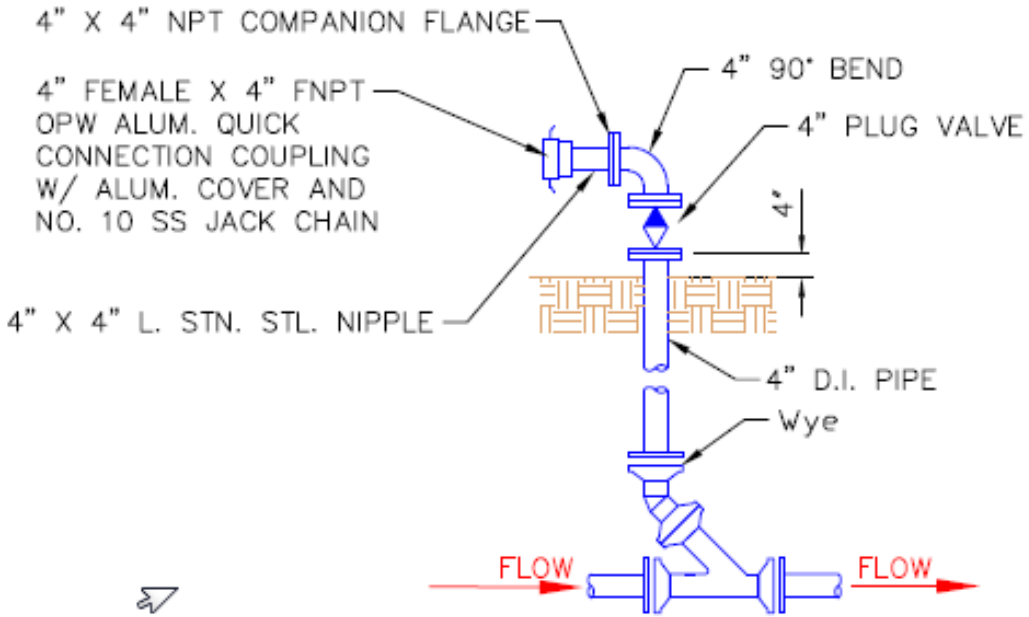

EMERGENCY PUMPING CONNECTION

NOT TO SCALE

NOTE:

4" SHOWN, CONNECTION SHALL BE THE SAME SIZE AS THE FM.

USE MECHNICAL JOINTS OR MEG-A-LUGS AT JOINTS.

DEZURICK OR EQUAL PLUG VALVE

PROVIDE BOLLARDS AROUND BYPASS CONNECTION FOR PROTECTION

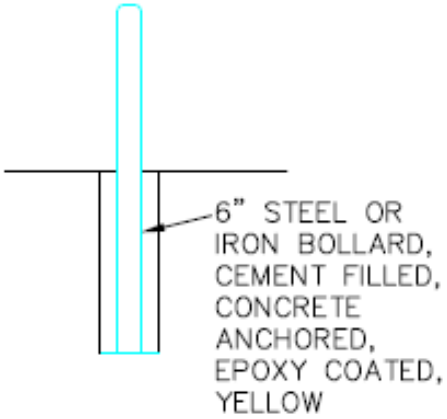

BOONSBORO Maryland

Department of Planning, Zoning, and Engineering
21 N. Main St. Boonsboro MD 21713

Design: BH
Drawn By: BH
Reviewed By: PL
Date: 1/10/17
Rev. __
Rev. __
Rev. __

Detail 20
Typical Pump Station Bypass Connection

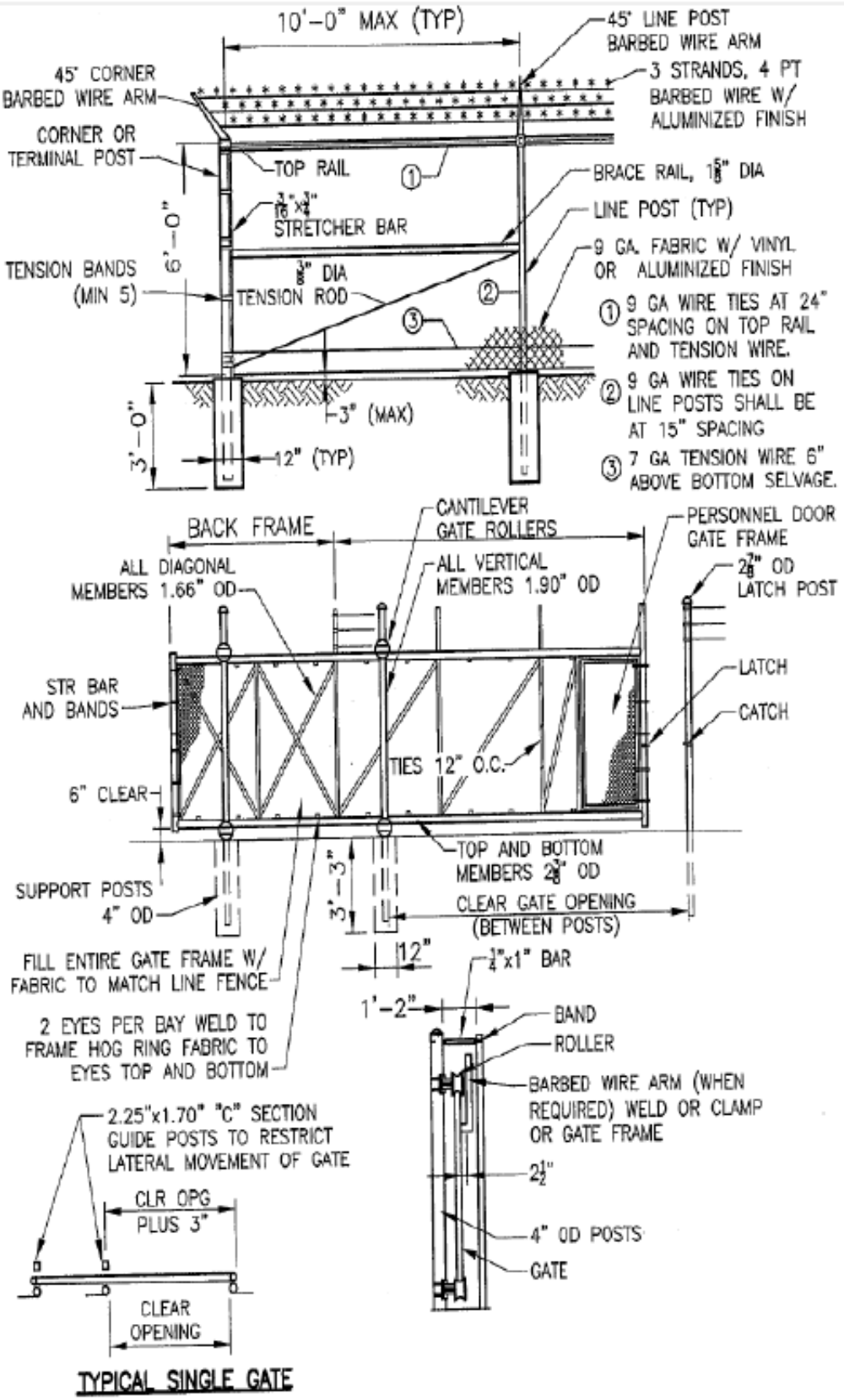

TYPICAL SINGLE GATE

BOONSBORO Maryland

Department of Planning, Zoning, and Engineering
21 N. Main St. Boonsboro MD 21713

Design: BH
Drawn By: BH
Reviewed By: PL
Date: 1/10/17
Rev.
Rev.
Rev.

Detail 21
Typical Fence and Gate