TOWN OF BOONSBORO

BOONSBORO, MD

EMPLOYEE HEALTH AND SAFETY HAND BOOK

February 2018

Table of Contents

Section I
Employees Acknowledgment of Receipt of Handbook---------- 1

Section II - Safety Program
Accident Prevention---------- 2
How and When to Report Injuries---------- 2
First Aid Kit Locations---------- 2
Documentation---------- 2
Continued Safety Education & Auditing---------- 2
Safety Data Sheet Locations---------- 2

Section III – Emergency Action Plan
Emergency Contacts---------- 3
Fires---------- 4
Power Outage---------- 4
Severe Weather---------- 5
Chemical Release---------- 6
Medical Emergency---------- 7

Section IV – Safety Topics
Personal Protective Equipment---------- 8
Confined Space---------- 18
Respirator Usage and Fit Test---------- 20
Back Injury Prevention---------- 22
Blood Borne Pathogens---------- 26
Compressed Gas Cylinders---------- 28
Driver Safety---------- 31
Electrical Safety---------- 32
Excavation and Trenching---------- 40
Fall Protection---------- 47
Fire Extinguisher Use---------- 49
Hand & Power Tools---------- 50
Hazard Communication---------- 56
Ladder Safety---------- 60
Lock Out / Tag Out---------- 61
Slip, Trip and Falls---------- 64
Stress Management---------- 65
Welding---------- 66
Training Summary---------- 68

Section V – Forms
Incident Report---------- 69
Confined Space Entry Permit---------- 70
Lock Out / Tag Out Authorization---------- 72
Training Sign In Sheet---------- 73

Employee Health and Safety Policy

I have received my copy of the Town of Boonsboro Employee Safety Manual and I have read and understand the information contained in this manual.

Safety Mission Statement

The Town of Boonsboro is firmly committed to providing a healthy and safe work environment for all employees, contractors and visitors. We will promote a culture of safety, continually improve our safety program and enforce safety standards.

Scope

The Employee Health and Safety Policy applies to all employees and contractors of the Town of Boonsboro.

Objectives

The goals of this policy is to remove or reduce the risks to the health, safety and welfare of all town employees and contractors.

The Town of Boonsboro is dedicated to ensuring that we comply with all OSHA Laws and Regulations.

Responsibilities

Management and Supervision

- Ensure employees are properly trained before being assigned to a work environment that requires training
- Make safety and health a top priority
- Provide a safe working environment
- Ensure all employees are properly trained and understand the risks
- Manage a documented safety program covering all required and relevant safety topics
- Conduct periodic inspections of facilities

Employees and Contractors

- Ensure their own personal safety and the safety of others
- Comply with all safety rules and regulations
- Wear the correct personal protective equipment for the job
- Communicate with management about safety and health issues
- Report all observed hazards to their supervisor
- Report all accidents and incidents
- Review safety handbook

_____ _____

Employee Name (please print) Date

_____

Employee Signature

_____ _____

Town Safety Coordinator (please print) Date

_____

Town Safety Coordinator Signature

Accident Prevention

Most accidents are caused by unsafe acts or unsafe working conditions. Accidents can be prevented by following proper safety precautions.

- Develop a safe attitude
- Report unsafe conditions or hazards
- Use required PPE
- Always lock and tag out equipment before servicing
- Do not remove or disable any safety devices on machinery, tools or equipment
- Never operate a piece of equipment unless you have been trained
- Observe all safety rules
- Good housekeeping practices prevents accidents
- Stay alert

How and When to Report Injuries

If you are injured or become ill on the job, report this to the Town Safety Coordinator or Supervision.

Report all incidents (including near misses / closcalls), hazards or concerns to the Town Safety Coordinator or Supervision.

First Aid Kit Locations

- Town Hall
- Maintenance Shop
- All Water Treatment Plants
- Wastewater Treatment Plant
- Town Vehicles

Documentation

All accidents, incidents, training, confined space entries or any piece of equipment that has been locked or tagged out must be document with the appropriate forms provided in this handbook.

Continued Safety Education and Auditing

In an effort to provide, a safe and healthy work environment for all town employees the Safety Coordinator will provide ongoing safety education and periodic auditing of town facilities.

- Safety topics will be distributed monthly
- Quarterly in-house safety audits
- Annual review of the safety hand book
- Annual training topics (Confined Space, Fall Protection, Respirator Use and Fit Test and Blood Borne Pathogens)

Safety Data Sheets Locations

Employees will have access to Safety Data Sheets at all locations that use hazardous chemicals.

- Maintenance Shop
- All Water Treatment Plants and Wastewater Treatment Plant

Emergency Contact List

Emergency Services - 911

Boonsboro Police Dept. (Non-Emergency) – 301-432-6838

Boonsboro Police Dept. (Emergency) – 240-313-4345

First Hose Company of Boonsboro – 301-432-2348

Boonsboro Ambulance and Rescue Service – 301-432-6979

Washington County Hazmat Response – 240-313-2780

Town Hall – 301-432-5141

Poison Control – 1-800-222-1222

Town Safety Coordinator – 301-465-0593

Public Works Superintendent – 301-992-3714

Water/Wastewater Superintendent – 301-992-2504

Health@Work – 240-313-9910

Emergency Action Plan

Fire Emergencies

When fire is discovered:

- Activate the nearest fire alarm
- Notify the local Fire Department
- If a fire alarm is not available, notify site personnel about the fire emergency and contact the local Fire Department

Fight the fire ONLY if:

- The Fire Department has been notified.
- The fire is small and is not spreading to other areas.
- Escaping the area is possible by backing up to the nearest exit
- The fire extinguisher is in working condition and personnel are trained to use it

Upon being notified about the fire emergency, occupants must:

- Leave the building using the designated escape routes
- Assemble in the designated area
- Remain outside until the competent authority (Designated Official or designee) announces that it is safe to reenter

Designated Official, Safety Coordinator or Supervisors must:

- Disconnect utilities and equipment unless doing so jeopardizes his/her safety
- Coordinate an orderly evacuation of personnel
- Perform an accurate head count of personnel reported to the designated area
- Provide the Fire Department personnel with the necessary information about the facility
- Ensure that all employees have evacuated the area/floor
- Report any problems to the Emergency Coordinator at the assembly area
- Assist all physically challenged employees in emergency evacuation

Power Outage

In the event of extended power loss to a facility, certain precautionary measures should be taken depending on the geographical location and environment of the facility:

- Unnecessary electrical equipment and appliances should be turned off in the event that power restoration would surge causing damage to electronics and effecting sensitive equipment
- Facilities with freezing temperatures should turn off and drain the lines of fire sprinkler systems, potable water lines and toilets
- Add propylene-glycol to drains to prevent traps from freezing
- Equipment that contain fluids that may freeze due to long term exposure to freezing temperatures should be moved to heated areas, drained of liquids, or provided with auxiliary heat sources

Upon Restoration of heat and power:

- Electronic equipment should be brought up to ambient temperatures before energizing to prevent condensate from forming on circuitry
- Fire and potable water piping should be checked for leaks from freeze damage after the heat has been restored to the facility and water turned back on

Severe Weather and Natural Disasters

Tornado

When sirens issue a warning or other means, seek inside shelter. Consider the following:

- Small interior rooms on the lowest floor and without windows
- Hallways on the lowest floor away from doors and windows
- Rooms constructed with reinforced concrete, brick, or block with no windows
- Stay away from outside walls and windows
- Use arms to protect head and neck
- Remain sheltered until the tornado threat is announced to be over

Earthquake

- Stay calm and await instructions from the Safety Coordinator or the designated official
- Keep away from overhead fixtures, windows, filing cabinets, and electrical power
- Assist people with disabilities in finding a safe place
- Evacuate as instructed by the Emergency Coordinator and/or the designated official

Flood

If indoors:

- Be ready to evacuate as directed by the Safety Coordinator or the designated official
- Follow the recommended primary or secondary evacuation routes

If outdoors:

- Climb to high ground and stay there
- Avoid walking or driving through floodwater
- If car stalls, abandon it immediately and climb to a higher ground

Hurricane

The nature of a hurricane provides for more warning than other natural and weather disasters. A hurricane watch issued when a hurricane becomes a threat to a coastal area. A hurricane warning is issued when hurricane winds of 74 mph or higher, or a combination of dangerously high water and rough seas, are expected in the area within 24 hours. Once a hurricane watch has been issued:

- Stay calm and await instructions from the Safety Coordinator or the designated official
- Moor any boats securely, or move to a safe place if time allows
- Continue to monitor local TV and radio stations for instructions
- Move out of low-lying areas, from the coast or at the request of officials
- If you are on high ground, away from the coast and plan to stay, secure the building, moving all loose items indoors and boarding up windows and openings
- Collect drinking water in appropriate container

Once a hurricane warning has been issued:

- Be ready to evacuate as directed by the Safety Coordinator or the designated official
- Leave areas that might be affected by storm tide or stream flooding

During a hurricane:

Remain indoors and consider the following safe areas:

- Small interior rooms on the lowest floor and without windows
- Hallways on the lowest floor away from doors and windows
- Rooms constructed with reinforced concrete, brick, or block with no windows

Blizzard

If indoors:

- Stay calm and await instructions from the Safety Coordinator or the designated official
- Stay indoors

If there is no heat:

- Close off unneeded rooms or areas
- Stuff towels or rags in cracks under doors
- Cover windows at night
- Eat and drink, food provides the body with energy and heat, fluids prevent dehydration
- Wear layers of loose-fitting, lightweight, warm clothing

If outdoors:

- Find a dry shelter
- Cover all exposed parts of the body

If shelter is not available:

- Prepare a windbreak or snow cave for protection from the wind
- Build a fire for heat and to attract attention, Place rocks around the fire to absorb and reflect heat
- Do not eat snow; it will lower your body temperature, melt it first

If stranded in a car or truck:

- Stay in the vehicle
- Run the motor about ten minutes each hour
- Open the windows a little for fresh air to avoid carbon monoxide poisoning
- Make sure the exhaust pipe is not blocked
- Make yourself visible to rescuers
- Turn on the dome light at night when running the engine
- Tie a colored cloth to your antenna or door
- Raise the hood after the snow stops falling
- Exercise to keep blood circulating and to keep warm

Chemical Release

When a Large Chemical Spill has occurred:

- Immediately notify the designated official or safety coordinator
- Contain the spill with available equipment (pads, booms, absorbent powder, etc.)
- Secure the area and alert all site personnel
- Do not attempt to clean the spill unless trained to do so

- Attend to injured personnel and call the medical emergency number, if required
- Call a local spill cleanup company or the Fire Department (if arrangement has been made) to perform a large chemical (e.g., mercury) spill cleanup
- Evacuate building as necessary

When a Small Chemical Spill has occurred:

- Notify the safety coordinator or supervisor
- If toxic fumes are present, secure the area (with caution tapes or cones) to prevent other personnel from entering
- Deal with the spill in accordance with the instructions described in the SDS
- Small spills must be handled in a safe manner, while wearing the proper PPE
- Review the general spill cleanup procedures in the SDS

Medical Emergency

Call medical emergency phone number

- Paramedics
- Ambulance
- Fire Department
- Other

Provide the following information:

- Nature of medical emergency
- Location of the emergency (address, building, room number)
- Your name and phone number from which you are calling
- Do not move victim unless absolutely necessary
- Call personnel trained in CPR and First Aid to provide the required assistance prior to the arrival of the professional medical help

If personnel trained in First Aid are not available, as a minimum, attempt to provide the following assistance:

- Stop the bleeding with firm pressure on the wounds (note: avoid contact with blood or other bodily fluids)
- Clear the air passages using the Heimlich Maneuver in case of choking
- In case of rendering assistance to personnel exposed to hazardous materials, consult the SDS
- Wear the appropriate personal protective equipment
- Attempt first aid ONLY if trained and qualified

Personal Protective Equipment

The Town of Boonsboro will provide all required Personal Protective Equipment to safety complete assigned tasks. The Town will provide:

- Non Prescription Safety Glasses
- Face Shields
- Work Gloves
- Hard Hats
- Single Use Ear Plugs and Ear Muffs
- Confined Space Entry Equipment
- Respirators

Hazards exist in every workplace in many different forms: sharp edges, falling objects, flying sparks, chemicals, noise and a myriad of other potentially dangerous situations. The Occupational Safety and Health Administration (OSHA) requires that employers protect their employees from workplace hazards that can cause injury.

Controlling a hazard at its source is the best way to protect employees. Depending on the hazard or workplace conditions, OSHA recommends the use of engineering or work practice controls to manage or eliminate hazards to the greatest extent possible. For example, building a barrier between the hazard and the employees is an engineering control; changing the way in which employees perform their work is a work practice control.

When engineering, work practice and administrative controls are not feasible or do not provide sufficient protection, employers must provide personal protective equipment (PPE) to their employees and ensure its use. Personal protective equipment, commonly referred to as "PPE", is equipment worn to minimize exposure to a variety of hazards. Examples of PPE include such items as gloves, foot and eye protection, protective hearing devices (earplugs, muffs) hard hats, respirators and full body suits.

This guide will help both employers and employees do the following

- Understand the types of PPE
- Know the basics of conducting a "hazard assessment" of the workplace
- Select appropriate PPE for a variety of circumstances
- Understand what kind of training is needed in the proper use and care of PPE

Selecting PPE

All PPE clothing and equipment should be of safe design and construction, and should be maintained in a clean and reliable fashion. Employers should take the fit and comfort of PPE into consideration when selecting appropriate items for their workplace. PPE that fits well and is comfortable to wear will encourage employee use of PPE. Most protective devices are available in multiple sizes and care should be taken to

select the proper size for each employee. If several different types of PPE are worn together, make sure they are compatible. If PPE does not fit properly, it can make the difference between being safely covered or dangerously exposed. It may not provide the level of protection desired and may discourage employee use.

OSHA requires that many categories of PPE meet or be equivalent to standards developed by the American National Standards Institute (ANSI). ANSI has been preparing safety standards since the 1920s, when the first safety standard was approved to protect the heads and eyes of industrial workers. Employers who need to provide PPE in the categories listed below must make certain that any new equipment procured meets the cited ANSI standard. Existing PPE stocks must meet the ANSI standard in effect at the time of its manufacture or provide protection equivalent to PPE manufactured to the ANSI criteria. Employers should inform employees who provide their own PPE of the employer's selection decisions and ensure that any employee-owned PPE used in the workplace conforms to the employer's criteria, based on the hazard assessment, OSHA requirements and ANSI standards. OSHA requires PPE to meet the following ANSI standards:

- Eye and Face Protection: ANSI Z87.1-1989 (USA Standard for Occupational and Educational Eye and Face Protection)
- Head Protection: ANSI Z89.1-1986
- Foot Protection: ANSI Z41.1-1991

For hand protection, there is no ANSI standard for gloves but OSHA recommends that selection be based upon the tasks to be performed and the performance and construction characteristics of the glove material. For protection against chemicals, glove selection must be based on the chemicals encountered, the chemical resistance and the physical properties of the glove material.

Eye and Face Protection

Employees can be exposed to a large number of hazards that pose danger to their eyes and face. OSHA requires employers to ensure that employees have appropriate eye or face protection if they are exposed to eye or face hazards from flying particles, molten metal, liquid chemicals, acids or caustic liquids, chemical gases or vapors, potentially infected material or potentially harmful light radiation.

Many occupational eye injuries occur because employees are not wearing any eye protection while others result from wearing improper or poorly fitting eye protection. Employers must be sure that their employees wear appropriate eye and face protection and that the selected form of protection is appropriate to the work being performed and properly fits each employee exposed to the hazard.

Prescription Lenses

Everyday use of prescription corrective lenses will not provide adequate protection against most occupational eye and face hazards, so employers must make sure that employees with corrective lenses either wear eye protection that incorporates the prescription into the design or wear additional eye protection over their

prescription lenses. It is important to ensure that the protective eyewear does not disturb the proper positioning of the prescription lenses so that the employee's vision will not be inhibited or limited. Also, employees who wear contact lenses must wear eye or face PPE when working in hazardous conditions.

Eye Protection for Exposed Employees

OSHA suggests that eye protection be routinely considered for use by carpenters, electricians, machinists, mechanics, millwrights, plumbers and pipefitters, sheet metal employees and tinsmiths, assemblers, sanders, grinding machine operators, sawyers, welders, laborers, chemical process operators and handlers, and timber cutting and logging workers. Employers of employees in other job categories should decide whether there is a need for eye and face PPE through a hazard assessment.

Examples of potential eye or face injuries include:

- Dust, dirt, metal or wood chips entering the eye from activities such as chipping, grinding, sawing, hammering, the use of power tools or even strong wind forces
- Chemical splashes from corrosive substances, hot liquids, solvents or other hazardous solutions
- Objects swinging into the eye or face, such as tree limbs, chains, tools or ropes
- Radiant energy from welding, harmful rays from the use of lasers or other radiant light (as well as heat, glare, sparks, splash and flying particles

Types of Eye Protection

Selecting the most suitable eye and face protection for employees should take into consideration the following elements:

- Ability to protect against specific workplace hazards
- Should fit properly and be reasonably comfortable to wear
- Should provide unrestricted vision and movement
- Should be durable and cleanable
- Should allow unrestricted functioning of any other required PPE

The eye and face protection selected for employee use must clearly identify the manufacturer. Any new eye and face protective devices must comply with ANSI Z87.1-1989 or be at least as effective as this standard requires. Any equipment purchased before this requirement took effect on July 5, 1994, must comply with the earlier ANSI Standard (ANSI Z87.1-1968) or be shown to be equally effective.

An employer may choose to provide one pair of protective eyewear for each position rather than individual eyewear for each employee. If this is done, the employer must make sure that employees disinfect shared protective eyewear after each use. Protective eyewear with corrective lenses may only be used by the employee for whom the corrective prescription was issued and may not be shared among employees.

Some of the most common types of eye and face protection include the following:

Safety spectacles. These protective eyeglasses have safety frames constructed of metal or plastic and impact-resistant lenses. Side shields are available on some models.

Goggles. These are tight-fitting eye protection that completely cover the eyes, eye sockets and the facial area immediately surrounding the eyes and provide protection from impact, dust and splashes. Some goggles will fit over corrective lenses.

Welding shields. Constructed of vulcanized fiber or fiberglass and fitted with a filtered lens, welding shields protect eyes from burns caused by infrared or intense radiant light; they also protect both the eyes and face from flying sparks, metal spatter and slag chips produced during welding, brazing, soldering and cutting operations. OSHA requires filter lenses to have a shade number appropriate to protect against the specific hazards of the work being performed in order to protect against harmful light radiation.

Laser safety goggles. These specialty goggles protect against intense concentrations of light produced by lasers. The type of laser safety goggles an employer chooses will depend upon the equipment and operating conditions in the workplace

Face shields. These transparent sheets of plastic extend from the eyebrows to below the chin and across the entire width of the employee's head. Some are polarized for glare protection. Face shields protect against nuisance dusts and potential splashes or sprays of hazardous liquids but will not provide adequate protection against impact hazards. Face shields used in combination with goggles or safety spectacles will provide additional protection against impact hazards.

Each type of protective eyewear is designed to protect against specific hazards. Employers can identify the specific workplace hazards that threaten employees' eyes and faces by completing a hazard assessment as outlined in the earlier section.

Head Protection

Protecting employees from potential head injuries is a key element of any safety program. A head injury can impair an employee for life or it can be fatal. Wearing a safety helmet or hard hat is one of the easiest ways to protect an employee's head from injury. Hard hats can protect employees from impact and penetration hazards as well as from electrical shock and burn hazards

Employers must ensure that their employees wear head protection if any of the following apply:

- Objects might fall from above and strike them on the head
- They might bump their heads against fixed objects, such as exposed pipes or beams
- There is a possibility of accidental head contact with electrical hazards.

Some examples of occupations in which employees should be required to wear head protection include construction workers, carpenters, electricians, linemen, plumbers and pipefitters, timber and log cutters, welders, among many others. Whenever there is a danger of objects falling from above, such as working

below others who are using tools or working under a conveyor belt, head protection must be worn. Hard hats must be worn with the bill forward to protect employees properly.
In general, protective helmets or hard hats should do the following:

- Resist penetration by objects
- Absorb the shock of a blow
- Be water-resistant and slow burning
- Have clear instructions explaining proper adjustment and replacement of the suspension and headband

Hard hats must have a hard outer shell and a shock-absorbing lining that incorporates a headband and straps that suspend the shell from 1 to 1 1/4 inches (2.54 cm to 3.18 cm) away from the head. This type of design provides shock absorption during an impact and ventilation during normal wear.

Protective headgear must meet ANSI Standard Z89.1-1986 (Protective Headgear for Industrial Workers) or provide an equivalent level of protection. Helmets purchased before July 5, 1994 must comply with the earlier ANSI Standard (Z89.1-1969) or provide equivalent protection.

Types of Hard Hats

There are many types of hard hats available in the marketplace today. In addition to selecting protective headgear that meets ANSI standard requirements, employers should ensure that employees wear hard hats that provide appropriate protection against potential workplace hazards. It is important for employers to understand all potential hazards when making this selection, including electrical hazards. This can be done through a comprehensive hazard analysis and an awareness of the different types of protective headgear available.

Class A hard hats provide impact and penetration resistance along with limited voltage protection (up to 2,200 volts)

Class B hard hats provide the highest level of protection against electrical hazards, with high-voltage shock and burn protection (up to 20,000 volts). They also provide protection from impact and penetration hazards by flying/falling objects

Class C hard hats provide lightweight comfort and impact protection but offer no protection from electrical hazards.

Another class of protective headgear on the market is called a "bump hat," designed for use in areas with low head clearance. They are recommended for areas where protection is needed from head bumps and lacerations. These are not designed to protect against falling or flying objects and are not ANSI approved. It is essential to check the type of hard hat employees are using to ensure that the equipment provides

appropriate protection. Each hat should bear a label inside the shell that lists the manufacturer, the ANSI designation and the class of the hat.

Size and Care Considerations

Head protection that is either too large or too small is inappropriate for use, even if it meets all other requirements. Protective headgear must fit appropriately on the body and for the head size of each individual. Most protective headgear comes in a variety of sizes with adjustable headbands to ensure a proper fit (many adjust in 1/8-inch increments). A proper fit should allow sufficient clearance between the shell and the suspension system for ventilation and distribution of an impact. The hat should not bind, slip, fall off or irritate the skin.

Some protective headgear allows for the use of various accessories to help employees deal with changing environmental conditions, such as slots for earmuffs, safety glasses, face shields and mounted lights. Optional brims may provide additional protection from the sun and some hats have channels that guide rainwater away from the face. Protective headgear accessories must not compromise the safety elements of the equipment.

Periodic cleaning and inspection will extend the useful life of protective headgear. A daily inspection of the hard hat shell, suspension system and other accessories for holes, cracks, tears or other damage that might compromise the protective value of the hat is essential. Paints, paint thinners and some cleaning agents can weaken the shells of hard hats and may eliminate electrical resistance. Consult the helmet manufacturer for information on the effects of paint and cleaning materials on their hard hats. Never drill holes, paint or apply labels to protective headgear as this may reduce the integrity of the protection. Do not store protective headgear in direct sunlight, such as on the rear window shelf of a car, since sunlight and extreme heat can damage them.

Hard hats with any of the following defects should be removed from service and replaced:

- Perforation, cracking, or deformity of the brim or shell
- Indication of exposure of the brim or shell to heat, chemicals or ultraviolet light and other radiation (in addition to a loss of surface gloss, such signs include chalking or flaking)

Always replace a hard hat if it sustains an impact, even if damage is not noticeable. Suspension systems are offered as replacement parts and should be replaced when damaged or when excessive wear is noticed. It is not necessary to replace the entire hard hat when deterioration or tears of the suspension systems are noticed.

Foot and Leg Protection

Employees who face possible foot or leg injuries from falling or rolling objects or from crushing or penetrating materials should wear protective footwear. Also, employees whose work involves exposure to hot substances or corrosive or poisonous materials must have protective gear to cover exposed body parts, including legs and feet. If an employee's feet may be exposed to electrical hazards, non-conductive footwear

should be worn. On the other hand, workplace exposure to static electricity may necessitate the use of conductive footwear.

Examples of situations in which an employee should wear foot and/or leg protection include:

- When heavy objects such as barrels or tools might roll onto or fall on the employee's feet
- Working with sharp objects such as nails or spikes that could pierce the soles or uppers of ordinary shoes
- Exposure to molten metal that might splash on feet or legs
- Working on or around hot, wet or slippery surfaces
- Working when electrical hazards are present

Safety footwear must meet ANSI minimum compression and impact performance standards in ANSI Z41-1991 (American National Standard for Personal Protection-Protective Footwear) or provide equivalent protection. Footwear purchased before July 5, 1994, must meet or provide equivalent protection to the earlier ANSI Standard (ANSI Z41.1-1967). All ANSI-approved footwear has a protective toe and offers impact and compression protection. But the type and amount of protection is not always the same. Different footwear protects in different ways. Check the product's labeling or consult the manufacturer to make sure the footwear will protect the user from the hazards they face.

Foot and leg protection choices include the following:

Leggings protect the lower legs and feet from heat hazards such as molten metal or welding sparks. Safety snaps allow leggings to be removed quickly.

Metatarsal guards protect the instep area from impact and compression. Made of aluminum, steel, fiber or plastic, these guards may be strapped to the outside of shoes.

Toe guards fit over the toes of regular shoes to protect the toes from impact and compression hazards. They may be made of steel, aluminum or plastic.

Combination foot and shin guards protect the lower legs and feet, and may be used in combination with toe guards when greater protection is needed.

Safety shoes have impact-resistant toes and heat-resistant soles that protect the feet against hot work surfaces common in roofing, paving and hot metal industries. The metal insoles of some safety shoes protect against puncture wounds. Safety shoes may also be designed to be electrically conductive to prevent the buildup of static electricity in areas with the potential for explosive atmospheres or nonconductive to protect employees from workplace electrical hazards.

Hand and Arm Protection

If a workplace hazard assessment reveals that employees face potential injury to hands and arms that cannot be eliminated through engineering and work practice controls, employers must ensure that employees wear appropriate protection. Potential hazards include skin absorption of harmful substances, chemical or thermal burns, electrical dangers, bruises, abrasions, cuts, punctures, fractures and amputations. Protective equipment includes gloves, finger guards and arm coverings or elbow-length gloves.

Employers should explore all possible engineering and work practice controls to eliminate hazards and use PPE to provide additional protection against hazards that cannot be completely eliminated through other means. For example, machine guards may eliminate a hazard. Installing a barrier to prevent employees from placing their hands at the point of contact between a table saw blade and the item being cut is another method.

Types of Protective Gloves

There are many types of gloves available today to protect against a wide variety of hazards. The nature of the hazard and the operation involved will affect the selection of gloves. The variety of potential occupational hand injuries makes selecting the right pair of gloves challenging. It is essential that employees use gloves specifically designed for the hazards and tasks found in their workplace because gloves designed for one function may not protect against a different function even though they may appear to be an appropriate protective device.

The following are examples of some factors that may influence the selection of protective gloves for a workplace.

- Type of chemicals handled
- Nature of contact (total immersion, splash, etc.)
- Duration of contact
- Area requiring protection (hand only, forearm, arm)
- Grip requirements (dry, wet, oily)
- Thermal protection
- size and comfort
- Abrasion/resistance requirements

Gloves made from a wide variety of materials are designed for many types of workplace hazards. In general, gloves fall into four groups:

- Gloves made of leather, canvas or metal mesh
- Fabric and coated fabric gloves
- Chemical- and liquid-resistant gloves
- Insulating rubber gloves

Body Protection

Employees who face possible bodily injury of any kind that cannot be eliminated through engineering, work practice or administrative controls, must wear appropriate body protection while performing their jobs. In addition to cuts and radiation, the following are examples of workplace hazards that could cause bodily injury:

- Temperature extremes
- Hot splashes from molten metals and other hot liquids
- Potential impacts from tools, machinery and materials
- Hazardous chemicals

There are many varieties of protective clothing available for specific hazards. Employers are required to ensure that their employees wear personal protective equipment only for the parts of the body exposed to possible injury. Examples of body protection include laboratory coats, coveralls, vests, jackets, aprons, surgical gowns and full body suits.

If a hazard assessment indicates a need for full body protection against toxic substances or harmful physical agents, the clothing should be carefully inspected before each use, it must fit each employee properly and it must function properly and for the purpose for which it is intended.

Protective clothing comes in a variety of materials, each effective against particular hazards, such as:

Paper-like fiber used for disposable suits provide protection against dust and splashes.

Treated wool and cotton adapts well to changing temperatures, is comfortable, and fire-resistant and protects against dust, abrasions and rough and irritating surfaces.

Duck is a closely woven cotton fabric that protects against cuts and bruises when handling heavy, sharp or rough materials.

Leather is often used to protect against dry heat and flames.

Rubber, rubberized fabrics, neoprene and plastics protect against certain chemicals and physical hazards. When chemical or physical hazards are present, check with the clothing manufacturer to ensure that the material selected will provide protection against the specific hazard.

Hearing Protection

Determining the need to provide hearing protection for employees can be challenging. Employee exposure to excessive noise depends upon a number of factors, including:

- The loudness of the noise as measured in decibels (dB)
- The duration of each employee's exposure to the noise
- Whether employees move between work areas with different noise levels
- Whether noise is generated from one or multiple sources

Generally, the louder the noise, the shorter the exposure time before hearing protection is required. For instance, employees may be exposed to a noise level of 90 dB for 8 hours per day (unless they experience a Standard Threshold Shift) before hearing protection is required. On the other hand, if the noise level reaches 115 dB hearing protection is required if the anticipated exposure exceeds 15 minutes.

If engineering and work practice controls do not lower employee exposure to workplace noise to acceptable levels, employees must wear appropriate hearing protection. It is important to understand that hearing protectors reduce only the amount of noise that gets through to the ears. The amount of this reduction is referred to as attenuation, which differs according to the type of hearing protection used and how well it fits. Hearing protectors worn by employees must reduce an employee's noise exposure to within the acceptable limits noted in Table 5. Refer to Appendix B of 29 CFR 1910.95, Occupational Noise Exposure, for detailed information on methods to estimate the attenuation effectiveness of hearing protectors based on the device's noise reduction rating (NRR). Manufacturers of hearing protection devices must display the device's NRR on the product packaging. If employees are exposed to occupational noise at or above 85 dB averaged over an eight-hour period, the employer is required to institute a hearing conservation program that includes regular testing of employees' hearing by qualified professionals. Refer to 29 CFR 1910.95(c) for a description of the requirements for a hearing conservation program.

Some types of hearing protection include:

Single-use earplugs are made of waxed cotton, foam, silicone rubber or fiberglass wool. They are self-forming and, when properly inserted, they work as well as most molded earplugs.

Pre-formed or molded earplugs must be individually fitted by a professional and can be disposable or reusable. Reusable plugs should be cleaned after each use.

Earmuffs require a perfect seal around the ear. Glasses, facial hair, long hair or facial movements such as chewing may reduce the protective value of earmuffs.

Confined Space Procedures

A knowledgeable instructor will teach Confined Space training on an annual basis to all affected employees. The training will consist of the description of confined spaces, potential hazards, the use of the portable gas monitor, how to set up the tri-pod / recovery winch, how to properly wear the safety harness and how to fill out the confined space entry permit.

What are confined spaces?

Confined Space

- Is large enough and so configured that an employee can bodily enter and perform assigned work
- Has limited or restricted means of entry or exit
- Is not designed for continuous occupancy

Permit Required Confined Space (a confined space that has one or more of the following characteristics)

- Contains or has the potential to contain a hazardous atmosphere (flammable gas, vapor, mist in excess of 10 % LEL, airborne combustible dust at concentrations that meet or exceed LFL, oxygen concentrations below 19.5% or above 23.5%
- Contains a material that has a potential for engulfing an entrant
- Has an internal configuration such that an entrant could be trapped or asphyxiated by inwardly converging walls or by a floor which slopes downward and tapers to a smaller cross-section
- Contains any other recognized serious safety or health hazard

Non-Permit Confined Space – a confined space that does not contain or with respect to atmosphere does not have the potential to contain any hazards capable of causing death or serious physical harm.

Attendant – an individual stationed outside one or more confined spaces and monitors the authorized entrants and who performs all attendants duties assigned by entry supervisor.

Authorized Entrant – an employee who is authorized by the employer to enter a permit confined space.

Entry Supervisor – an employee responsible for determining if acceptable entry conditions are present at a permit required space where entry is planned, for authoring and overseeing entry conditions and for terminating entry as required.

Rescuers – personnel designated to rescue employees from permit spaces.

PROCEDURES

Permit Required Confined Space

- Eliminate any unsafe condition prior to removing the cover
- Properly guard the opening
- Test the internal atmosphere prior to entry for oxygen content, flammable gases, vapors and potential toxic air contaminants
- Provide all personnel protective equipment needed
- Use appropriate retrieval system
- Continuous forced air ventilation may be used to eliminate a hazardous atmosphere
- Atmosphere in space will continuously be monitored and results shall be logged every 30 minutes

- If hazardous atmosphere is detected during entry, the employees will leave the space immediately, determine cause and implement measures to protect employees prior to reentry
- Document certification of compliance through completion of permit prior to employee entry
- Coordinate with contractors when joint entry is performed
- Establish procedures for contacting emergency services
- Maintain permit on file and send copy to the Town Safety Coordinator

Non-Permit Confined Space

- Evaluate space for hazardous atmosphere prior to entry
- If no hazards, one person may enter with monitor
- Can only perform normal day to day tasks
- Any deviation in monitoring results and the entry must be done under permit
- Space can be elevated to permit for maintenance tasks and then returned to non-permit entry

Summary

Employees that have not been formally trained will not participate with any part of entry procedures. It is important to follow all procedures for the safety of all involved. If any concerns arise, please contact the Town Safety Coordinator.

Respirator Usage and Fit Test

A knowledgeable instructor will teach proper respirator usage and perform a respirator fit test on all affected employees on an annual basis.

OSHA Face Piece Seal Protection

The employer shall not permit respirators with tight-fitting face pieces to be worn by employees who have:

- Facial hair that comes between the sealing surface of the face piece and the face or that interferes with valve function
- Any condition that interferes with the face-to-face piece seal or valve function.

If an employee wears corrective glasses or goggles or other personal protective equipment, the employer shall ensure that such equipment is worn in a manner that does not interfere with the seal of the face piece to the face of the user.

For all tight-fitting respirators, the employer shall ensure that employees perform a user seal check each time they put on the respirator using the procedures recommended by the respirator manufacturer.

Types of Respirators we use

Particulate Respirators: Particulate respirators are the simplest, least expensive, and least protective of the respirator types available. These respirators only protect against particles (e.g., dust). They do not protect against chemicals, gases or vapors and are intended only for low hazard levels. The commonly known "N-95" filtering face piece respirator or "dust mask" is one type of particulate respirator, often used in hospitals to protect against infectious agents. Particulate respirators are "air purifying respirators" because they clean particles out of the air as you breathe.

- Filter out dusts, fumes and mists
- Are usually disposable dust masks or respirators with disposable filters
- Must be replaced when they become discolored, damaged, or clogged

Chemical Cartridge/Gas Mask Respirator: Gas masks are also known as "air-purifying respirators" because they filter or clean chemical gases out of the air as you breathe. This respirator includes a face piece or mask, and a cartridge or canister. Straps secure the face piece to the head. The cartridge may also have a filter to remove particles.

Gas masks are effective only if used with the correct cartridge or filter (these terms are often used interchangeably) for a particular biological or chemical substance. Selecting the proper filter can be a complicated process. There are cartridges available that protect against more than one hazard, but there is no "all-in one" cartridge that protects against all substances. It is important to know what hazards you will face in order to be certain you are choosing the right filters/cartridges.

- Uses replaceable chemical cartridges or canisters to remove the contaminant
- Are color-coded to help you select the right one
- May require more than one cartridge to protect against multiple hazards

Self-Contained Breathing Apparatus: SCBA's are the respirator commonly used by firefighters. These use their own air tank to supply clean air, so you do not need to worry about filters. They also protect against higher concentrations of dangerous chemicals. However, they are very heavy (30 pounds or more), and require very special training on how to use and to maintain them. In addition, the air tanks typically last an hour or less depending upon their rating and your breathing rate.

- Provide clean air from a portable air tank when the air around you is simply too dangerous to breathe

All of these respirators (except for the "dust masks" or filtering face pieces) are available in either half-mask or full-face pieces.

Summary

Employees that have not completed annual training for respirator use and the respirator fit test will not be permitted to use respirators for the safety of all involved. Please contact the Town Safety Coordinator with any questions or concerns.

Back Injury Prevention

See a Doctor When:

- Your pain is the result of a specific injury
- Pain is so bad you cannot move
- Pain goes down your leg
- Your leg, foot, groin area feel numb
- You have fever, nausea, stomach pain, weakness or sweating
- You lose bladder or bowel control
- You do not notice improvement in back health after two to three weeks

Types of Back Pain

Short-term

Short-term low back pain is very common and lasts no longer than three months. Most of this minor back pain is the result of overuse or straining of the muscles or ligaments. If properly treated, the pain will be gone within a few weeks.

Long Term

Long-term back pain lasts more than three months and may cause severe disability.

Why Stay Active?

A common and sometimes harmful myth is that all activity should be avoided when experiencing back pain. Many people are afraid that activity will only make the pain or injury worse. For most back problems, light activity helps speed the healing process. Gradual activity and stretching may reduce future back pain and reduce the likelihood of re-injury.

How Stretching Helps

You can minimize and prevent back pain with stretches that make the muscles in your back, stomach, hips and thighs flexible and strong.

Reduce Injuries

When you stretch, muscles relax and lengthen. Relaxed muscles withstand stress better than tight ones. Typically, the more flexible you are, the less likely you are to suffer back pain.

Improve Performance

Stretching can increase your range of motion, making you more effective at work and in other activities. It may help you become more efficient in performing your daily tasks.

If you have ever experienced lower back fatigue or discomfort, you are not alone. Nearly everyone at some point has had back pain that interferes with work, routine daily activities or recreation. Back pain is the second most common neurological ailment in the US, only headache is more common. Lower back injuries are mechanical in nature, the result of acute strain or chronic disorders such as degenerative disc disease or arthritis. Acute low back discomfort may be caused by work factors, a sports injury, work around the house, a

sudden jolt such as a car accident or other lifestyle factors outlined below. Fortunately, most occurrences of low back discomfort go away within a matter of days. By far, the best way to manage low back fatigue and discomfort is to PREVENT it in the first place.

Lifestyle Causes

- Dehydration: Healthy muscles are comprised of at least 70% water. Dehydration causes muscle fatigue, strain, tendonitis and other disorders of the movement system
- Poor Nutrition: Eating too many "empty" calories that do not contain the nutrients our body needs is a primary cause of injuries and disorders of the movement system
- Inflammation: Inflammation causes many lifestyle-related disorders, including heart disease and movement system disorders, too much sugar and fat within our diet can contribute to inflammation
- Fatigue: Adequate amounts of rest and sleep are very important ingredients for our health
- Poor Fitness: Poor levels of physical fitness increases the risk of disease and injury

Prevention and Relief of Back Pain

Proper warm-up & body mechanics will reduce daily fatigue and give you more energy left over at the end of the day. We are ALL athletes in life, so we need to warm-up like athletes to improve our performance and to reduce risk of injury. We should also plan to work smarter, not harder. Proper body mechanics should always be used to avoid excessive fatigue and injury.

Drinking plenty of water is one of the most important things you can do for your health. Healthy muscles are comprised of at least 70% water. Dehydration of the muscles and tendons is a primary cause of muscle fatigue, strain, tendonitis and other disorders of the movement system. How much water do you need every day? Your Body Weight ÷ 2 = oz. of water per day (Example: 160 pounds ÷ 2 = 80 oz. of water per day).

Healthy eating is one of the most important weapons that we have to fight against injury and illness. The foods we choose to eat determine what our bodies look like on the outside and how well our body functions on the inside. Eat fewer "empty" calories from dead foods, and eat more calories from living foods. Living foods include fruit, vegetables, nuts, and seeds. Living foods are harvested. Dead foods are processed and not good for you.

Adequate amounts of **rest and sleep** are very important ingredients for our health. When we do not get enough sleep, increased release of stress hormones raises the level of inflammation in the body. If rest and sleep deficits persist, we become more vulnerable to injuries and chronic diseases. Sleep experts generally agree that most adults require between 6.5 - 9 hours of sleep each day maintaining optimal health and safety.

We need to maintain our **physical fitness** levels to prevent injuries and illness. There is a correlation between poor levels of physical fitness and increased risk of disease and injury. The lower the level of fitness, the higher the risk of injury.

Workplace athletes can use **ice or cold therapy** to control fatigue and soreness after activity. Ice application should be between 15 to 20 minutes applied directly onto the skin of the affected area. An initial aching will be felt when the ice is on the skin. After 5 minutes, this should go away as the ice takes effect. Ice is a great anti-inflammatory. Never use heat after activity.

Vitamin & mineral supplements are not a substitute for healthy eating, but they can fill in the gaps and help combat fatigue and inflammation. Experts recommend three daily supplements: 1) a quality multivitamin and mineral supplement, 2) a vitamin D supplement with calcium and magnesium and 3) omega-3 fatty acids

Stretching

Although stretching should focus primarily on the back, it is also important to stretch and strengthen the stomach, arms and legs. For example, the hamstring muscles, located at the back of the upper thigh area, play a large role in lower back function. Tightness in the hamstrings limits motions of the pelvis and can place undue stress on the lower back.

Strengthening

Strong muscles are essential to a healthy back. If your muscles are weak, back injuries are more likely and recovery is more difficult. Strong hip and leg muscles are important for lifting.

Follow these simple guidelines:

- Stretch until a mild tension is felt and then hold for 5-10 seconds
- Hold the stretch steady and do not bounce
- Never stretch to the point of numbness, tingling or pain
- Focus on the activity and avoid any distractions
- Take your time — do not rush
- Do not hold your breath — breathe freely; relax for better results
- Repeat the activity 3-5 times on each side
- Make sure you stretch and strengthen all of the major muscle groups which include your legs, arms, shoulders and back

Lower Back Stretching: Perform 3-5 times per day

1. Lay on floor on your back. Keeping one leg straight, bring your other leg up towards your chest as shown. Gently pull with your arms until you feel a stretch in your lower back. Hold stretch for 20 seconds, relax and repeat. Then perform on the other side.

2. Sit on chair with feet apart. Gently bend over to stretch the lower back as shown. Hold stretch for 20 seconds, relax and return to an upright position, then repeat the stretch.

3. Sit with knees together. Slowly bend forward and reach to the outside of the right leg with left arm as shown. Hold stretch for 20 seconds, relax and repeat. Then perform stretch on the other side

4. Lie face down on elbows as shown. Slowly straighten arms and push up until a gentle stretch is felt in the lower back. Hold for 20 seconds, relax and repeat the stretch.

5. Lie on back as shown. Place a towel around your foot; slowly pull leg straight until you feel a gentle stretch in the back of your thigh. Switch to stretch the opposite leg. Hold stretch for 20 seconds, relax and repeat. Then stretch the other side.

Lower Back Exercise: Perform 2-3 times per week

1. Lie on back with knees bent and feet flat on floor. Slowly lift buttocks up and pause, then slowly lower back down to the start position. Perform 2 sets of 12 reps.

2. Lie face down with arms outstretched and towel roll under forehead as shown. Raise left arm and right leg off the floor, slowly lower to start position, and then perform exercise with right arm and left leg. Perform 2 sets of 12 reps.

3. Lie face down with arms to sides as shown. Arch back by raising shoulders and thighs upward. Slowly lower to the start position. Perform 2 sets of 12 reps.

4. Lie on back with knees bent and feet flat on floor. Tighten abdominal muscles to push lower back flat into the floor, pause before returning to the starting position. Perform 2 sets of 12 reps.

5. Position on hands and knees as shown. Slowly arch back upward and pause before returning to the starting position. Perform 2 sets of 12 reps.

6. Lie on back with knees bent and hands behind head. Contract abdominal muscles to raise left shoulder toward right knee. Lower to start position and repeat exercise on opposite side. Perform 2 sets of 12 reps.

Blood Borne Pathogens

Blood Borne Pathogen training will occur on an annual basis.

What are blood borne pathogens?

Blood borne pathogens are infectious microorganisms in human blood that can cause disease in humans. These pathogens include, but are not limited to, hepatitis B (HBV), hepatitis C (HCV) and human immunodeficiency virus (HIV). Needle sticks and other sharps-related injuries may expose workers to blood borne pathogens. Workers in many occupations, including first responders, housekeeping personnel in some industries, nurses and other healthcare personnel, all may be at risk for exposure to blood borne pathogens.

You cannot contract HIV or HBV from

- Touching an infected person
- Airborne particulates (coughing or sneezing)
- Using the same equipment, materials, tools, water fountains or showers of an infected person

The most common ways of transmission are

- Sexual contact
- Shared needles
- Being stuck by an infected needle or other sharp instrument
- Direct contact with broken or chaffed skin and infect body fluids

All workers that face potential exposure to blood borne pathogens need to follow what is called "universal precautions". This means that you treat all blood and other body fluids as if they were infected. This is the same kind of precaution used with any potentially hazardous substances.

The use of personal protective equipment acts as a barrier between employees and direct contact with blood borne pathogens.

Any PPE that is worn to prevent contact with potential blood or wastes needs to be maintained by the wearer. Always check you PPE to ensure they are in good working condition. Properly dispose of all items, clean, and store any reusable equipment after each use. The employee is responsible to keep their assigned PPE in good working condition and any defective equipment needs to be immediately replaced.

Another universal precaution is to wash any exposed skin with soup and water immediately after a potential exposure to infected materials. Maintain good work habits such as:

- Don't take food and drink into work areas
- Take care to minimize splashing of all materials
- Cover any open cuts, scrapes, rashes and broken skin
- Don't touch anything that's contaminated, such as sharps or body fluids

One of the most common routes of exposure for blood borne pathogens on the job is being stuck by needles or other sharp instruments. Sharps are to be disposed of in assigned puncture resistant, leak proof containers so that an exposure cannot occur. Employees are not to bend, recap or remove sharps from any container. These containers are often red in color and always have the biohazard symbol on them and may have the word "biohazard" on them. These containers are not to be opened by any employee at any time.

If you are stuck by a needle or other sharp object or get blood or other potentially infectious materials in your eyes, nose, mouth or on broken skin, immediately flood the exposed area with water and clean any wound

with soap and water or a skin disinfectant if available. Report this immediately to your employer and seek immediate medical attention.

Compressed Gas Cylinders

For any hazardous gas leak call 911 immediately, clear the area, account for all employees and others that may have been in the area, and then follow emergency personnel's instructions once they are on the scene.

Employees are responsible for safe use of compressed gas cylinders and liquid containers and their contents. Compressed-gas hazards include oxygen displacement, explosion, and toxic effects as well as the physical hazards of a ruptured cylinder. Employers must evaluate compressed-gas hazards and have an emergency-response plan that defines procedures and responsibilities to address emergencies.

Safe Handling and Use

Compressed gases must be handled and used only by trained employees. Employers must inform employees about chemical hazards through a hazard communication program, labels, and other forms of warnings. Always consult the gas manufacturer's safety data sheets (SDS's) for specific information.

- Ensure that cylinders are clearly identified. Labels must not be defaced or removed. Do not accept or use containers whose content labels are not legible. Instead, separate the containers and return them to the supplier. Do not use the container's color to identify the cylinder's content and do not repaint the container. All gas lines leading from a compressed gas supply must be clearly labeled or identified.

- Leave valve protection caps in place (if provided) until cylinders are secured and connected for use. Some types of gas cylinders have valve outlet caps and plugs that form a gas-tight seal. Keep the device on the valve outlet except when containers are secured and connected.

- Keep cylinder valves closed except when the cylinder is being used. Closing the valve isolates the cylinder's contents from the surrounding atmosphere and prevents corrosion and contamination of the valve. When opening a cylinder valve, stand so that the valve outlet is pointed away from yourself and all other employees. Open valves slowly.

- Replace protective caps and outlet caps or plugs before returning empty cylinders to the supplier

- Never tamper with or alter cylinders, valves, or safety relief devices. Do not tighten connections or leaking fittings or attempt other repairs while the system is under pressure.

- Do not subject cylinders to artificially low temperatures or temperatures above 125 F. Do not place them next to heat sources or allow a flame to contact any part of the cylinder

- Do not place cylinders where they become part of an electric circuit or use them as a ground during electric welding.

- Transferring compressed gases from one container to another should be performed only by the gas supplier or by personnel familiar with the hazards. They must be trained and qualified to use the

proper trans fill equipment and must have detailed written operating procedures that include equipment inspections and maintenance procedures. Non-refillable cylinders cannot be refilled.

- Avoid dragging or sliding cylinders. Do not lift cylinders by the caps. Firmly secure the cylinder and move with a suitable hand truck, lift truck, or crane with a cradle or platform. Do not use lifting magnets. Slings, ropes, or chains are acceptable if the cylinder is equipped by the manufacturer with lifting attachments. Never drop cylinders or strike them against one another or other surfaces.

Cylinder Storage

Group and store compressed gases based on their hazard class. Provide adequate space or segregate by partitions and post a conspicuous sign that identifies the gas or hazard class.

Storage areas should be dry, well drained, ventilated, and fire-resistant. Avoid sub-surface storage. Cylinders can be stored in the open, but they should be protected from the ground or continuous dampness to prevent rusting. Prevent exposure to salt, corrosive chemicals or fumes. Cylinders can usually be stored in the sun; however, cylinders must not exceed temperatures above 125 F. Always refer to the manufacturers' storage requirements and SDS's.

Storage areas should protect cylinders from damage. Do not store on unprotected platform edges or obstruct walkways or exits. Use brackets, chains, or straps around the upper third of the cylinder to secure cylinders in storage or in use. Store charged and empty cylinders apart, if possible. Empty cylinders have residual pressure and should always be handled as if full.

Oxygen's primary hazard is as an oxidizer that vigorously accelerates combustion. A minimum of 20 feet must be maintained between oxidizers, flammable gases and other combustible materials, such as oil or grease. A firewall (partition) five feet high with a half-hour fire rating can be substituted. Common oxidizing gases include chlorine, nitrous oxide, and fluorine.

The primary hazard for acetylene and propane is flammability. Both are secondarily asphyxiants. Acetylene may decompose violently under pressure in excess of 15 pounds per square inch gauge. These two gases can be stored together. Store flammables in a well-ventilated area away from oxidizers, open flames, sparks and other sources of heat or ignition. Storage areas must have appropriate fire protection (fire extinguishers or fire suppression equipment).

Argon and carbon dioxide are asphyxiants. Asphyxiants (including inert gases) can displace oxygen and may cause suffocation.

Atmosphere-supplying respiratory protection is required in an oxygen-deficient atmosphere, which has less than 19.5 percent oxygen by volume. Corrosive and toxic gases present serious hazards: keep exposures as low as possible and avoid inhaling or contact with skin or eyes. Employee exposures should not exceed OSHA exposure limits. Safety showers and eyewash stations must be available for those using corrosive gases such as ammonia and chlorine.

Appropriate protective equipment that is readily accessible for an emergency response depends on proper assessment of the hazards. Emergency entry or planned entry into unknown concentrations or conditions immediately dangerous to life and health for toxic, corrosive or asphyxiation hazards require the use of NIOSH-approved, full-face piece, pressure demand, self-contained, breathing apparatus (SCBA) or a pressure-demand, supplied-air respirator with auxiliary self-contained air supply.

Cryogenic liquids are extremely cold and cause thermal burns upon contact with the body. Provide suitable personal protective equipment. Commonly used liquid cryogens include argon, helium, methane, oxygen and

hydrogen. Hazards vary according to the specific cryogen and include explosion or flammability and asphyxiation. Store containers upright and follow distributors' recommendations.

Transportation

In-House Transportation

- Regulators must be removed
- Valves must be closed
- Valve caps must be on
- Secure cylinders in a cylinder cart with a chain and move to new location
- Use platforms or cradles that keep cylinders upright and secured when lifting with mechanical equipment
- Do not lift cylinders by their valve cap
- Do not drag or roll cylinders horizontally

Short-Term Vehicle Transportation

Some gases are not permitted to be transported in personal vehicles (i.e. vehicles not designed and authorized to transport compressed gas cylinders). There are also maximum quantities of gases that can be transported in certain types of vehicles. Transporting compressed gas cylinders in vehicles that are unsuitable for such purposes and by personnel, who are unauthorized and untrained, can result in serious injury or death.

The preferred method of transporting cylinders is in the supplier's truck.

If a cylinder must be transported a short distance by an employee, the following requirements must be followed:

- Cylinders must meet the Department of Transportation's requirements for labeling, marking and placarding
- A suitable vehicle, such as a truck, must be used to transport the cylinder
- The valve cap must be on the cylinder to protect the valve stem
- The cylinder must be secured in an upright position in the back of the truck to prevent cylinder damage, especially the valve stem, during transport
- Inspect the cylinder for existing damage prior to attempting transport
- The cylinder must be located in the back of the truck to provide adequate ventilation in event of a leak
- Direct sunlight or excessive temperatures can result in a release of the cylinder contents
- Do not smoke during transport
- Take a direct route to the new location and do not make any intermediate stops along the way
- Avoid heavy traffic routes
- Remove the cylinder from the vehicle as soon as you have reached your destination
- Place the cylinder in the proper storage area

Cylinder Inspections

Employees must visually inspect compressed-gas cylinders. In general, inspect for exterior corrosion, denting, bulging, gouges or digs. Measure these flaws with a variety of devices and compare to defined limits. Experience is important in the inspection of cylinders. Users who lack experience should return questionable cylinders to the gas supplier. Leaking regulators, cylinder valves, or other equipment should be taken out of service.

Driver Safety

Stay Safe

- Use a seat belt at all times – driver and passenger(s)
- Be well rested before driving
- Avoid taking medications that make you drowsy
- Set a realistic goal for the number of miles that you can drive safely each day
- If alcohol or any drug impairs you, do not drive

Stay Focused

- Driving requires your full attention.
- Avoid distractions, such as adjusting the radio or other controls, eating or drinking and talking on the phone
- Continually search the roadway to be alert to situations requiring quick action
- Stop about every two hours for a break, get out of the vehicle to stretch, take a walk and get refreshed

Avoid Aggressive Driving

- Keep your cool in traffic
- Be patient and courteous to other drivers
- Do not take other drivers' actions personally
- Reduce your stress by planning your route ahead of time (bring the maps and directions), allowing plenty of travel time and avoiding crowded roadways and busy driving times

Electrical Safety

Electrocution is the fourth leading cause of work-related death for construction workers. On average, one worker is electrocuted on the job every day in the United States.

Grounding

There are two different ways of wiring an electrical tool. Double insulation or the use of equipment grounding. First, the individual wires in the tool and cord are insulated and the cord itself is insulated. These are the first level of insulation.

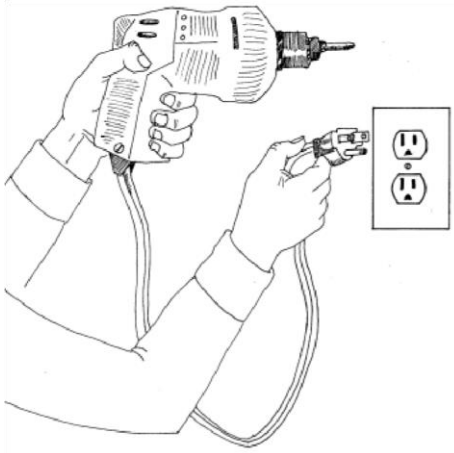

With the double insulation method, the manufacturer provides a second level of insulation inside the tool, to reduce the risk of a damaged "hot" wire within the tool (generally at 120 volts AC) from coming in contact with any exposed metal on the tool.

Double insulation protects you by providing another insulation barrier, preventing a wiring defect that could allow an energized conductor to touch any metal on the tool that you can touch. A double insulated tool will be marked on its handle or on a data label with the words "Double Insulated" or a square box within a box symbol.

With the equipment grounding method, a third wire is added to the tool's wiring and connected to a round pin on the tool's plug. The other end of this grounding wire is connected to the metal frame of the tool. The 3-conductor plug on the tool must be plugged into a grounded outlet. The equipment ground connection on the outlet must be connected to a grounding connection at the electrical panel. The steel electrical panel is then connected to the earth. This is generally done via clamping a system ground wire to a METAL cold water pipe or to ground rods driven into the earth.

All electrical tools and equipment must be maintained in a safe condition and checked regularly for defects. They must be taken out of service if a defect is found.

Install a Grounded Outlet

Occasionally you will encounter a building with older wiring, having receptacles with only two slots (called "hot" and "neutral"). These older receptacles do not contain a round slot for the "equipment ground." If you have a tool with a 3-prong plug, this is a problem.

The best solution is to have a licensed electrician install one or more grounded outlets. Of course, this will take some time and money. Is there anything else you can do instead? Here are three possibilities:

In the United States, you can buy a 3-prong adaptor. This is not a good idea unless you are sure of what you are doing. These adaptors generally come with either a small metal tab (to be attached to the screw securing a receptacle to its box cover) or with a short wire (often with green insulation and a thin, bare lug at the end of the wire). In theory, you can attach the metal tab or the grounding wire to a grounded screw in a grounded receptacle, thereby getting your equipment ground connection. If you do not know what you are doing, such as, if there is no proper ground at the receptacle, there is no equipment ground, therefore, no protection from electrical shock.

Another possible alternative is to get your power from a grounded generator supplying a 120 volts AC grounded outlet. (Of course, your generator must be outdoors so hazardous engine exhaust cannot enter your work area and you will need a grounded extension cord).

Finally, you could do your work with cordless tools, operating at a relatively low DC voltage with rechargeable batteries. This method would eliminate the 120 volts AC electrical hazard you would otherwise encounter.

NEVER break off a grounding prong from a 3-conductor plug. Your tools will still work, but you will have NO PROTECTION from a dangerous electrical shock in the event of an electrical defect in the tool!

Conductors, Connections and Polarity

It takes a minimum of two wires to have an electrical circuit. Electric current involves the flow of electrons. Current is measured in amperes (amps for short). It travels from a source, through the device it operates, called the load, and then back to the source.

In AC wiring, present in buildings, there is voltage present on the "hot" wire (generally at about 120 volts AC). Voltage provides the force that allows electrons to flow in a circuit. Switches on electrical devices are supposed to be wired only on the hot or live side of the circuit. The return conductor, known as the neutral, is at zero volts because it is deliberately grounded at the electrical panel. The amount of current that flows in a circuit depends on its electrical resistance or opposition to current flow, measured in ohms.

In an electrical shock, the amount of electrical current, in amps, that flows through your body goes up when resistance in ohms goes down.

The Current in Amps = Voltage in Volts DIVIDED BY Resistance in Ohms

HIGHER VOLTAGE = more current (if resistance remains the same)

LOWER RESISTANCE = more current (if voltage remains the same)

Newer electric plugs have blades that are polarized, so the hot wire on the device is connected to the hot side of the electrical receptacle and the neutral wire is connected to the neutral side. This is done by making the neutral blade on the plug wider than the hot blade. If you look at a grounded outlet, you will see that the hot slot is shorter than the neutral slot.

Older plugs may not be polarized, and both blades are the same size. It is best to have an electrician re-wire the device using a polarized plug. The electrician should also ensure that the receptacle is properly wired.

Electricians install *grounded circuits*. They follow OSHA's *Lockout/Tag out* standard when working on them. Circuits are de-energized and isolated. Stored energy is released and conductors are grounded. De-activated controls are then locked out and tags are placed at their "off" position.

Reversed Polarity Can Kill!

What can happen if a neutral wire of a device is connected to the hot side of a circuit? This condition is known as reversed polarity. In a worst case scenario, the result can be death. However, your electrical device will still work (It just wants voltage across its load, nothing more).

There are inexpensive devices known as circuit testers or polarity testers. Plug in this 3-prong device and you will know at a glance if there is a wiring problem in the receptacle, just by looking at which lights are lit on the device. The two most dangerous conditions are, hot and ground reversed and hot and neutral reversed.

Using Electrical Equipment in Wet Locations

Using electrical tools or equipment in wet areas can be a hazard. If your skin is dry, it has quite a lot of resistance (measured in ohms). However, if your skin is wet for any reason (rain, sweat, standing in a puddle of water), the skin's electrical resistance drops dramatically. The amount of electrical current, in amps, that flows through your body goes up when resistance in ohms goes down. Amps = Volts/Ohms.

HOW MUCH CURRENT DOES IT TAKE TO KILL ME?

It does not take much, especially if it passes through your heart. Currents above about 75 milliamps (mA) can cause a condition called ventricular fibrillation. (A milliamp is 1/1,000 of 1 amp.) If your heart goes into fibrillation, it beats very rapidly, but it does not pump any blood, because it is not beating in its normal rhythm. If your blood cannot carry oxygen to your brain, you will experience brain death in 3 to 4 minutes. The way to get you back involves another electric shock, from a defibrillator.

If your skin is wet and you get your body across 120 volts of electricity, it is very likely that you will have a current of 100 mA or more flowing through your heart. Currents ABOVE 10 MA can cause muscle paralysis. You may not be able to let go of energized tools or equipment. Shocks that are longer in duration are more severe.

Electrical systems must be wired with either fuses or circuit breakers. These devices are known as overcurrent protection and they are rated in amps. Most common household circuits are wired for 15 amps or 20 amps. Overcurrent protection devices protect wiring and equipment from overheating and fires. They may or may not protect you from electrical shock. If the current is not high enough, the fuse will not blow or the circuit breaker will not trip. You could be shocked or killed without ever blowing a fuse or tripping a circuit breaker.

GFCI's to the Rescue

A great breakthrough in electrical safety came with the invention of the ground fault circuit interrupter (GFCI). A ground fault occurs when electrical current flows on a path where it is not supposed to be. Under normal conditions, current flows in a circuit, traveling from the source, through the device it operates, called the load and then back to the source.

Current (amps) flows out to the load from the "hot" side (which is generally at 120 volts AC) and returns on the "neutral" side (which is at zero volts). Under normal conditions, these two currents (hot and neutral) are equal. If they are not equal, because of current leakage (current returning on a different path than the neutral conductor), we get a ground fault. This can occur if current flows through your body and returns to the source through a path to ground. Electricity will take ANY available path to return to its source. We want it to return only on the neutral.

The ground fault circuit interrupter (GFCI) works by using the above principles. It measures total current on the hot side and total current on the neutral side of the circuit. They are supposed to be equal. If these two currents differ from each other by more than 5 milliamps (plus or minus 1 mA), the GFCI acts as a fast-

acting circuit breaker and shuts off the electricity within 1/40 of 1 second. You can still feel this small amount of current, but it will quickly shut off.

GFCIs are manufactured in many forms. The most common one is the GFCI outlet. However, there are also GFCI circuit breakers, plug-in GFCI outlets and GFCI extension cords, as well as GFCIs hard-wired into devices such as hair dryers. All types have "Test" and "Reset" functions. The GFCI must trip when you press the "Test" button. It must also energize the circuit when you press, "Reset." If either test fails, you must replace the GFCI in order to be protected!

Wire Size and Ampacity

In terms of conducting electrical current, size matters, the size of the electrical conductor. Take a look at the following table regarding ampacity, the current carrying capacity of a conductor in amps. You will notice two things; the amount of current a wire can safely carry increases as the diameter (and area) of the wire increases and as the number of the wire size decreases. Welcome to the American Wire Gauge (AWG).

AWG Copper Wire Table

Copper Wire size (AWG)	Diameter (mils)	Area (Circular mils)	Ampacity in free air	Ampacity as part of 3-conductor cable
14 AWG	64.1	4109	20 Amps	15 Amps
12 AWG	80.8	6529	25 Amps	20 Amps
10 AWG	101.9	10,384	40 Amps	30 Amps
8 AWG	128.5	16,512	70 Amps	50 Amps

Extension Cords, Copper and Current

With the wide use of power tools on construction sites, flexible extension cords often are necessary. Because they are exposed, flexible and unsecured, they are more susceptible to damage than is fixed wiring. Hazards are created when cords, cord connectors, receptacles, and cord and plug connected equipment are improperly used and maintained. **Here are some factors on extension cord safety noted by OSHA.**

Strain Relief

To reduce hazards, flexible cords must connect to devices and to fittings in ways that prevent tension at joints and terminal screws. Flexible cords are finely stranded for flexibility, so straining a cord can cause the strands of one conductor to loosen from under terminal screws and touch another conductor.

Cord Damage

A flexible cord may be damaged by door or window edges, by staples and fastenings, by abrasion from adjacent materials, or simply by aging. If the electrical conductors become exposed, there is a danger of

shocks, burns or fire. **Replace frayed or damaged cords. Avoid running cords over sharp corners and edges.**

Durability

The OSHA construction standard requires flexible cords to be rated for hard or extra hard usage. These ratings are derived from the National Electrical Code and are required to be indelibly marked approximately every foot along the length of the cord. Examples of these codes are S, ST, SO, and STO for hard service and SJ, SJO, SJT, and SJTO for junior hard service.

Grounding

Extension cords must be 3-wire type so they may be grounded and to permit grounding of any tools or equipment connected to them.

Wet Conditions

When a cord connector is wet, electric current can leak to the equipment grounding conductor and to humans who pick up that connector if they provide a path to ground. Such leakage can occur not just on the face of the connector, but at any wetted portion. Limit exposure of connectors and tools to excessive moisture by using watertight or sealable connectors.

Power Line Hazards

Most people know that power lines can kill, yet a surprising number of power line deaths occur on a regular basis. Electricity is generated and transmitted at high voltages for a good reason. It limits power loss as the electricity travels long distances from power plant to point of use. Power lines can be at tens of thousands of volts, even at hundreds of thousands of volts The higher the voltage, the greater the potential danger.

Problems occur when people or equipment get too close to energized lines. Some of the most common situations that occur are:

- Contacting lines with cranes and other construction equipment
- Hitting a line when erecting or moving a scaffold
- Getting too close with a ladder or a tool, especially a conductive one, such as aluminum or wood.

There are three major ways to control power line hazards:

- Maintaining a safe distance from lines
- Having the power company de-energize and ground the power line(s)
- Have a power company rep at the site
- Having the power company install insulated sleeves (also known as "eels") over power lines.

NOTE: Only the electric power utility can determine the clearance distance for this method of *insulating lines.*

Staying away from power lines is the best option. The following illustration shows the safe power line clearance distance, as well as the working clearance distance. The table shows clearance distances from power lines for various line voltages.

NOTE: The term kV = 1,000 volts. For example, 50 kV = 50,000 volts.

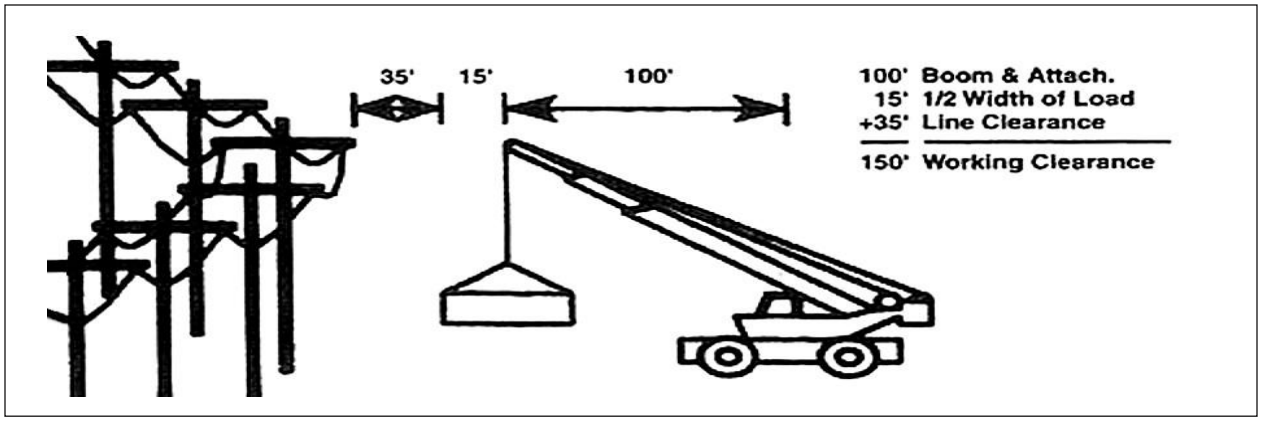

Voltages	Distances from Power Lines
≤ 50kV	10 feet
200 kV	15 feet
350 kV	20 feet
500 kV	25 feet
650 kV	30 feet
800 kV	35 feet

The best and easiest way, is to follow this rule

Up to 50 kV – Stay at least 10 feet away

Over 50 kV – Stay at least 35 feet away

Preventive Measures

General

- Move equipment/activity to the safe working distance from power lines
- Have utility de-energize and visibly ground power lines
- Have utility move power lines to the safe working distance
- Have utility install insulated sleeves on power lines
- Install flagged warning lines to mark horizontal and vertical power line clearance distances
- Use nonconductive tools and materials

Cranes and Other High Reaching Equipment

- Use an observer
- Use an insulated link, if applicable
- Use a boom cage guard, if applicable
- Use a proximity device, if applicable

Mobile Heavy Equipment

- Install rider posts or goal posts under power lines
- Install warning signs at driver's eye level

Ladders

- Use nonconductive ladders
- Do not carry or move extension ladders fully extended, retract before moving
- Get help moving ladders to maintain control

Material Storage

- Don't store any materials under power lines
- Use caution tape and signs to cordon off area under power lines

Excavations

- Call Miss Utility several days before you dig to locate all underground cables
- Hand dig within three feet of cable location
- Be aware that more than one underground cable may be buried in area of locator markings

Electrical Safety Summary

CORD AND PLUG OPERATED electric tools with exposed metal parts must have a three-prong grounding plug and be grounded or double insulated.

EQUIPMENT GROUNDING only works when there is a permanent and continuous electrical connection between the metal shell of a tool and the earth.

PROPER POLARITY IN ELECTRICAL WIRING IS IMPORTANT. Hot to hot, neutral to neutral, equipment ground to equipment ground. Polarized plugs have a wider neutral blade to maintain correct polarity. Reversed polarity can kill.

CIRCUITS MUST BE EQUIPPED WITH FUSES OR CIRCUIT BREAKERS to protect against dangerous overloads. Fuses melt, while circuit breakers trip to turn off current like a switch. Overcurrent protection devices protect wiring and equipment from overheating and fires. They may, or may not, protect you.

MOST 120 VOLT CIRCUITS are wired to deliver up to 15 or 20 amps of current. Currents of 50100 *milliamperes* can kill you. (1 mA = 1/1,000 of 1 Amp.)

WET CONDITIONS LOWER SKIN RESISTANCE, allowing more current to flow through your body. Currents above 75 milliamps can cause ventricular fi brillation, which may be fatal. Severity of a shock depends on the path of current, amount of current, duration of current, voltage level, moisture and your general health.

A GROUND FAULT CIRCUIT INTERRUPTER (GFCI) protects from a ground-fault, the most common electrical hazard. GFCI's detect differences in current flow between hot and neutral. They trip when there is current leakage. Such as through a person of about 5 milliamperes and they act within 1/40 of a second. Test a GFCI every time you use it. It must "Trip" and it must "Reset."

EXTENSION CORD WIRES MUST BE HEAVY ENOUGH for current they will carry. For construction, they must be UL approved, have strain relief and a 3-prong grounding plug, be durable and be rated for hard or extra-hard usage.

OVERHEAD POWER LINES CAN KILL. The three major methods of protection are maintaining a safe distance, de-energizing and grounding lines, having the power company install insulating sleeves and having a power company rep on the site.

UNDERGROUND POWER LINES CAN KILL. Call before you dig to locate all underground cables. Hand dig within three feet of cable location!

Excavation and Trenching

Excavation and trenching are among the most hazardous construction operations. The Occupational Safety and Health Administration's (OSHA) Excavation standards, 29 Code of Federal Regulations (CFR) Part 1926, Subpart P, contain requirements for excavation and trenching operations.

What is the difference between an excavation and a trench?
OSHA defines an excavation as any man-made cut, cavity, trench or depression in the Earth's surface formed by earth removal. A trench is defined as a narrow excavation (in relation to its length) made below the surface of the ground. In general, the depth of a trench is greater than its width, but the width of a trench (measured at the bottom) is not greater than 15 feet (4.6 m).

What are the dangers of trenching and excavation operations?
Trenching and excavation work presents serious hazards to all workers involved. Cave-ins pose the greatest risk and are more likely than some other excavation-related incidents to result in worker fatalities. One cubic yard of soil can weigh as much as a car. An unprotected trench can be an early grave. Employers must ensure that workers enter trenches only after adequate protections are in place to address cave-in hazards. Other potential hazards associated with trenching work include falling loads, hazardous atmospheres and hazards from mobile equipment.

What do the OSHA Excavation standards cover and how do they protect workers?
The standards apply to all open excavations made in the Earth's surface, including trenches. Following the requirements of the standards will prevent or greatly reduce the risk of cave-ins and other excavation-related incidents.

What are the soil classification categories?
Some of the compliance methods permitted under the Excavation standards require a competent person to classify soil and rock deposits as: Stable rock and Type A, B or C soil.

Stable Rock – Natural solid mineral matter that can be excavated with vertical sides and remain intact while exposed.

Type A – Cohesive soils with an unconfined compressive strength of 1.5 tons per square foot (tsf) (144 kPa) or greater. Examples include clay, silty clay, sandy clay, and clay loam.

Certain conditions preclude soil from being classified as Type A. For example, no soil is Type A if it is fissured or has been previously disturbed.

Type B – Includes cohesive soil with an unconfined compressive strength greater than 0.5 tsf (48 kPa) but less than 1.5 tsf (144 kPa) and granular cohesion less soils (such as angular gravel, similar to crushed rock, silt, silt loam, sandy loam, and in some cases, silty clay loam and sandy clay loam).

Type C – Cohesive soil with an unconfined compressive strength of 0.5 tsf (48 kPa) or less, granular soils (including gravel, sand, and loamy sand), submerged soil or soil from which water is freely seeping, submerged rock that is not stable or material in a sloped, layered system where the layers dip into the excavation or with a slope of four horizontal to one vertical or steeper.

Note: Unconfined compressive strength means the load per unit area at which a soil will fail in compression. It can be determined by laboratory testing or estimated in the field using a pocket penetrometer, thumb penetration tests or other methods.

What is a competent person?
A competent person is an individual, designated by the employer, who is capable of identifying existing and predictable hazards in the surroundings or working conditions which are unsanitary, hazardous or dangerous to workers and who is authorized to take prompt corrective measures to eliminate them.

Under the Excavation standards, tasks performed by the competent person include:

- Classifying soil
- Inspecting protective systems
- Designing structural ramps
- Monitoring water removal equipment
- Conducting site inspections

Preplanning

Why is preplanning important to excavation work?
No matter how many trenching, shoring, and backfilling jobs an employer has done in the past, it is important to approach each new job with care and preparation. Many on the job incidents result from inadequate initial planning. Waiting until after the work starts to correct mistakes in shoring or sloping slows down the operation, adds to the cost of the project and makes a cave in or other excavation failure more likely.

What safety factors should be considered before starting the job?
Before work begins, employers should know as much as possible about the jobsite and the materials they will need to have on hand to perform the work safely and in compliance with OSHA standards. A safety checklist may prove helpful when employers are considering new projects. Factors to consider may include:

- Traffic
- Proximity and physical condition of nearby structures
- Soil classification
- Surface and ground water
- Location of the water table
- Overhead and underground utilities
- Weather
- Quantity of shoring or protective systems that may be required
- Fall protection needs
- Number of ladders that may be needed
- Other equipment needs

Employers can gather the information they need through jobsite studies, observations, test borings for soil type or conditions and consultations with local officials and utility companies. This information will help employers determine the amount, kind and cost of safety equipment they will need to perform the work safely.

How can employers avoid hitting underground utility lines and pipes during excavation work?
Before starting work, the Excavation standards require employers to do the following:

- Determine the approximate location(s) of utility installations including sewer, telephone, fuel, electric and water lines. One common industry practice is to call Miss Utility to establish the location of any underground utility installations in the work area.
- Contact and notify the utility companies or owners involved to inform them of the proposed work within established or customary local response times.

- Ask the utility companies or owners to establish the location of underground installations prior to the start of excavation work. If they cannot respond within 24 hours (unless the period required by state or local law is longer) or cannot establish the exact location of the utility installations, employers may proceed with caution, which includes using detection equipment or other acceptable means to locate utility installations.
- Determine the exact location of underground installations by safe and acceptable means when excavation operations approach the approximate location of the installations.
- Ensure that while the excavation is open, underground installations are protected, supported or removed as necessary to safeguard workers.

Protective Systems

How can employers prevent cave-ins?
OSHA generally requires that employers protect workers from cave-ins by:

- Sloping and benching the sides of the excavation
- Supporting the sides of the excavation
- Placing a shield between the side of the excavation and the work area.

What types of protective systems can employers use to protect workers from cave-ins?
In many cases, the type of protective system needed is well known and simple to use. At other times, employers will undertake the more complex process of designing a protective system. Designing a protective system requires consideration of many factors, including soil classification, depth of cut, water content of soil, weather, climate and other operations in the vicinity. Employers are free to choose the most practical design that will provide the necessary protections. Any system used must meet the required performance criteria.

The Excavation standards describe various methods and approaches that can be used to design protective systems. Examples of protective systems that can be used to comply with the Excavation standards include:

- Sloping the sides of the excavation to an angle not steeper than 1½:1 (for every foot of depth, the trench must be excavated back 1½ feet). A slope of this gradation is safe for any type of soil.

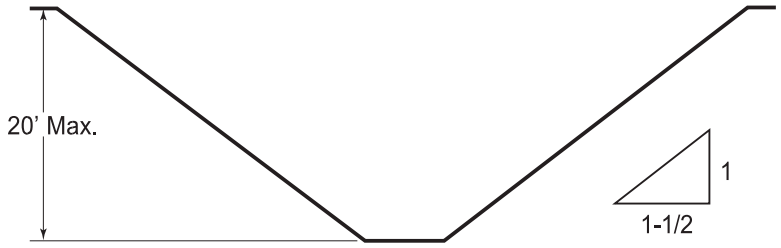

Figure 1. **Slope of 1½:1**

- Designing a sloping and benching system in accord with tabulated data, such as tables and charts, approved by a registered professional engineer. This data must be in writing and must include enough explanatory information (including the criteria for selecting a system and the limits on the use of the data) for the user to be able to select an appropriate protective system. At least one copy of the data, which identifies the registered professional engineer who approved it, must be kept at the worksite during construction of the

protective system. After the system is completed, the data may be stored away from the jobsite, but a copy must be provided upon request to an OSHA compliance officer.

- Using a trench box or shield approved by a registered professional engineer or designed in accord with tabulated data approved by a registered professional engineer.

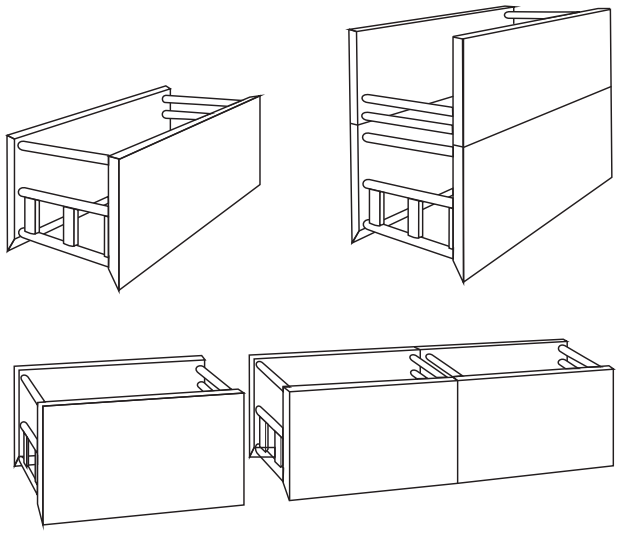

Figure 2. *Trench Shields*

The Excavation standards do not require a protective system when an excavation is made entirely in stable rock or when an excavation is less than 5 feet (1.52 meters) deep and a competent person has examined the ground and found no indication of a potential cave-in.

What other precautions do employers need to take to protect workers from cave-ins?
The Excavation standards require employers to provide support systems, such as shoring, bracing or underpinning, when necessary to ensure that adjacent structures (including adjoining buildings, walls, sidewalks and pavements) remain stable for the protection of workers. The standards also prohibit excavation below the base or footing of any foundation or retaining wall that could be reasonably expected to pose a hazard to workers unless:

- The employer provides a support system, such as underpinning
- The excavation is in stable rock
- A registered professional engineer determines that the structure is far enough away from the excavation that it would not be affected by the excavation activity or that the excavation work will not pose a hazard to workers.

Excavations that would undermine sidewalks, pavement, and appurtenant structures are prohibited unless the employer provides an appropriately designed support system or another effective method of protecting workers from the possible collapse of those structures.

What are the requirements for safely installing and removing protective systems?
The Excavation standards require employers to take certain steps to protect workers when installing and removing support systems. For example:

- Members of support systems must be securely connected to prevent sliding, falling, kick outs or predictable failure.
- Support systems must be installed and removed in a manner that protects workers from cave-ins and structural collapses and from being struck by members of the support system.
- Members of support systems must not be overloaded.
- Before temporary removal of individual members, additional precautions are required, such as installing other structural members to carry loads imposed on the support system.
- Removal must begin at, and progress from, the bottom of the excavation.
- Backfilling must progress together with the removal of support systems from excavations.

In addition, the standards permit excavation of 2 feet (0.61 meters) or less below the bottom of the members of a support system, but only if the system is designed to resist the forces calculated for the full depth of the trench and there are no indications, while the trench is open, of a possible loss of soil from behind or below the bottom of the support system. Employers must coordinate the installation of support systems with the excavation work.

What do employers need to do to maintain materials and equipment used for protective systems?

Employers are responsible for maintaining materials and equipment used for protective systems. Defective and damaged materials and equipment can cause protective systems to fail and lead to other excavation hazards. Employers must ensure that:

- Materials and equipment are free from damage or defects that might impair their proper function.
- Manufactured materials and equipment are used and maintained consistent with the manufacturer's recommendations and are used to prevent worker exposure to hazards.
- A competent person examines any damaged materials or equipment to evaluate its suitability for continued use.
- If a competent person cannot assure that damaged material or equipment can support the intended loads or is otherwise suitable for use, the materials and equipment are removed from service until evaluated and approved by a registered professional engineer.

Additional Hazards and Protections

What other excavation hazards do employers need to address?

In addition to cave-ins and related hazards, workers involved in excavation work are exposed to hazards involving falling loads and mobile equipment. To protect workers from these hazards, OSHA requires employers to take certain precautions. For example, employers must:

- Protect workers from excavated or other materials or equipment that could pose a hazard by falling or rolling inside the excavation by placing and keeping such materials or equipment at least 2 feet (0.61 meters) from the edge and/or by using a retaining device to keep the materials or equipment from falling or rolling into the excavation.

- Provide a warning system (such as barricades, hand or mechanical signals or stop logs) when mobile equipment is operated adjacent to an excavation, or when such equipment must approach the edge of an excavation, and the operator does not have a clear and direct view of the edge.
- Protect workers from loose rock or soil that could fall or roll from an excavation face by scaling to remove loose material, installing protective barricades at appropriate intervals or using other equivalent forms of protection.
- Institute and enforce work rules prohibiting workers from working on faces of sloped or benched excavations at levels above other workers unless the workers at the lower levels are adequately protected from the hazards of falling, rolling, or sliding material or equipment.
- Institute and enforce work rules prohibiting workers from standing or working under loads being handled by lifting or digging equipment.
- Require workers to stand away from vehicles being loaded or unloaded to protect them from being struck by any spillage or falling materials. (Operators may remain inside the cab of a vehicle being loaded or unloaded if the vehicle is equipped to provide adequate protection for the operator.)

What is the effect of water accumulation on excavation safety and what do employers need to do to protect workers from water-related excavation hazards?

Water in an excavation can undermine the sides of the excavation and make it more difficult for workers to get out of the excavation. The OSHA standards prohibit employers from allowing workers to enter an excavation where water has accumulated or is accumulating unless adequate precautions are taken to protect workers. Such precautions can include special support or shield systems to prevent cave-ins, water removal to control the water level or the use of a safety harness and lifeline. If an employer uses water removal equipment to control or prevent water accumulation, the equipment and operations must be monitored by a competent person to ensure proper use. If excavation work interrupts the natural drainage of surface water, the OSHA standards also require the use of diversion ditches, dikes or other suitable means to prevent surface water from entering the excavation and to provide adequate drainage of the adjacent area. In addition, a competent person must inspect excavations subject to runoffs from heavy rains and excavations subject to such runoffs are subject to the requirements described previously in this paragraph.

How can employers protect workers from hazardous atmospheres inside excavations?

Atmospheric testing is required before workers enter an excavation greater than 4 feet (1.22 meters) in depth where an oxygen deficiency or a hazardous atmosphere is present or could reasonably be expected, such as in excavations in landfill areas or excavations in areas where hazardous substances are stored nearby. If there are any hazardous conditions present, the employer must ensure that adequate precautions are taken to prevent employee exposure to those conditions. Such precautions include providing workers with proper respiratory protection or ventilation. In addition, when controls are used to reduce the level of atmospheric contaminants to acceptable levels, testing must be conducted as often as necessary to ensure that the atmosphere remains safe.

If hazardous atmospheric conditions exist or may reasonably be expected to develop in an excavation, the employer must ensure the ready availability of emergency rescue equipment, such as breathing apparatus, a safety harness and line or a basket stretcher. This equipment must be attended when in use.

Note: In addition to the Excavation standards' provisions on hazardous atmospheres in excavations, OSHA's Confined Spaces in Construction standard (29 CFR Part 1926, Subpart AA) applies to non-excavation work within a confined space located in an excavation. These standards are intended to complement each other and address two distinct hazards: hazardous atmospheres in excavations and the additional hazards associated with confined spaces located within excavations. For example, the Confined

Spaces in Construction standard covers entry into a prefabricated storm drain, other pipe or manhole even if located at the bottom of an open excavation.

What means of access and egress must employers provide?
OSHA requires employers to provide ladders, steps, ramps, or other safe means of egress for workers working in trench excavations 4 feet (1.22 meters) or deeper. The means of egress must be located so as not to require workers to travel more than 25 feet (7.62 meters) laterally within the trench.

Any structural ramps used solely for worker access or egress must be designed by a competent person. Structural ramps used for access or egress of equipment must be designed by a competent person qualified in structural design. In addition, structural members used for ramps or runways must be uniform in thickness and joined in a manner to prevent tripping or displacement.

What protective equipment are employers required to provide to workers in pier holes and confined footing excavations?
Employers must ensure that any worker who enters a bellbottom pier hole or similar deep and confined footing excavation wears a harness with a lifeline. The lifeline must be attached securely to the harness and must be separate from any line used to handle materials. Also, the lifeline must be individually attended by an observer at all times when the worker wearing the lifeline is in the excavation.

When must employers conduct site inspections?
Employers must ensure that a competent person inspects all excavations, adjacent areas and protective systems daily for possible cave-ins, indications of failures in protective systems and equipment, hazardous atmospheres and other hazardous conditions. Inspections must be done prior to the start of work and as needed throughout the shift. Inspections are also required after natural events, such as rainstorms or other hazard-increasing occurrences, such as blasting work. If an inspector finds any unsafe conditions during an inspection, the employer must clear workers from the hazardous area until the necessary safety precautions have been taken.

Conclusion
When employers share the details of their safety and health programs with workers, they should emphasize the critical role workers play in keeping the jobsite safe. Employers also need to emphasize specific practices that will help reduce the risk of on-the-job injuries at excavation sites. Such practices can include the following:

- Know where underground utilities are located before digging
- Keep excavated soil (spoils) and other materials at least 2 feet (0.61 meters) from trench edges
- Keep heavy equipment away from trench edges
- Identify any equipment or activities that could affect trench stability
- Test for atmospheric hazards such as low oxygen, hazardous fumes, and toxic gases when workers are more than 4 feet deep
- Inspect trenches at the start of each shift
- Inspect trenches following a rainstorm or other water intrusion
- Inspect trenches after any occurrence that could have changed conditions in the trench
- Do not work under suspended or raised loads and materials
- Ensure that personnel wear high-visibility or other suitable clothing when exposed to vehicular traffic.

Fall Protection

In the construction industry in the United States, falls are the leading cause of worker fatalities. Each year, on average, between 150 and 200 workers are killed and more than 100,000 are injured because of falls at construction sites. The standard for fall protection deals with both the human and equipment-related issues in protecting workers from fall hazards.

The OSHA standard states: "Each employee on a walking/working surface (horizontal and vertical surface) with an unprotected side or edge which is 6 feet (1.8 m) or more above a lower level shall be protected from falling by the use of guardrail systems, safety net systems or personal fall arrest systems."

There are two types of fall protection, ***Fall Restraint and Fall Arrest.***

Fall Restraint includes such items as a guardrail or parapet wall. It can also consist of a personal fall restraint system, which keeps you from reaching an unprotected "fall" point.

> Guardrails (on scaffolds, aerial lifts and on the perimeter of buildings) are considered a Fall Restraint type of fall protection. They must have a top rail at least 39" to 45" above a working surface. The top rail must be able to withstand a force of 200 lbs. in any direction. Mid rails must be placed mid-way between the top rail and the working surface, and be able to with stand a minimum force of 150 lbs. Top and mid rails must be at least ¼" in diameter so as to prevent cuts and or lacerations. Guardrails are used to protect individuals from falls greater than 6 feet.

Fall Arrest *STOPS* you if you are falling.

> If you are at risk for falling 6 feet or more, you must use appropriate fall protection equipment. One type of appropriate fall protection equipment is the personal fall arrest system. The entire personal fall arrest system must be capable of withstanding the tremendous impact forces involved in a fall. A person without protection will free fall 4 feet in ½ second and 16 feet in 1 second! A personal fall arrest system includes a full body harness, a shock-absorbing lanyard or a rope grab and vertical lifeline and a sound anchorage able to support a load of 5000 pounds.

DO

- Pick an anchorage point that will support 5000 lbs. per worker (strong enough to support a pickup truck)
- Fall arrest systems should be rigged so employees cannot free fall more than 6 feet (or contact any lower level)
- Tie off above your head. A six-foot person who ties off at the feet could free-fall as much as 12 feet
- Place your anchorage directly above/behind your work area to avoid potential swing fall hazards
- Use the shortest lanyard possible. The shorter the tie-off, the shorter the fall
- Have anchorage points selected by a competent person

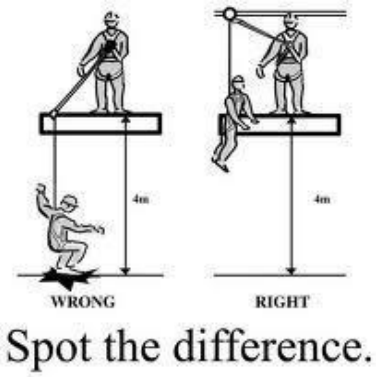

DON'T

- Do not tie off to vent pipes or a non-structured non-designated area
- Do not tie a knot in lanyard, this will reduce its strength
- Do not use water pipes, electrical conduits, light fixtures or guardrails as anchor point.
- Do not use any lanyards without self-locking snap hooks
- Do not join multiple lanyards together to reach an anchorage
- Do not allow more than one worker to tie-off to the same anchorage unless it is designed and approved by an engineer
- Do not unhook from fall protection while exposed to a fall greater than 6 feet
- Do not allow someone else to rig your equipment unless you verify that it has been done correctly
- Do not use an anchorage that is not independent of any anchorage used to support or suspend platforms

Checklist:

- ✓ Inspect your equipment daily
- ✓ Look for fraying ropes, crack or other defects in hardware
- ✓ Tag and remove defective equipment from service
- ✓ Make sure you are attached to a sound anchorage.

If there is any doubt about the safety of the equipment, do not use it. Replace any equipment, including ropes, involved in a fall.

Fire Extinguisher Use

Using a Fire Extinguisher

The following steps should be followed when responding to incipient stage fire:

- Sound the fire alarm and call the fire department, if appropriate
- Identify a safe evacuation path before approaching the fire. Do not allow the fire, heat or smoke to come between you and your evacuation path
- Select the appropriate type of fire extinguisher
- Discharge the extinguisher within its effective range using the P.A.S.S. technique (pull, aim, squeeze, and sweep)
- Back away from an extinguished fire in case, it flames up again
- Evacuate immediately if the extinguisher is empty and the fire is not out
- Evacuate immediately if the fire progresses beyond the incipient stage

Most fire extinguishers operate using the following P.A.S.S. technique:

1. **PULL** - Pull the pin. This will also break the tamper seal.
2. **AIM** - Aim low, pointing the extinguisher nozzle (or its horn or hose) at the base of the fire.

   NOTE: Do not touch the plastic discharge horn on CO2 extinguishers, it gets very cold and may damage skin.

3. **SQUEEZE** - Squeeze the handle to release the extinguishing agent.
4. **SWEEP** - Sweep from side to side at the base of the fire until it appears to be out. Watch the area. If the fire re-ignites, repeat steps 2 - 4.

If you have the slightest doubt about your ability to fight a fire...EVACUATE IMMEDIATELY!

Hand & Power Tools

What Are the Hazards of Hand Tools?

Hand tools are tools that are powered manually. Hand tools include anything from axes to wrenches. The greatest hazards posed by hand tools result from misuse and improper maintenance.

Some examples include the following:

- If a chisel is used as a screwdriver, the tip of the chisel may break and fly off, hitting the user or other employees
- If a wooden handle on a tool, such as a hammer or an axe, is loose, splintered, or cracked, the head of the tool may fly off and strike the user or other employees
- If the jaws of a wrench are sprung, the wrench might slip
- If impact tools such as chisels, wedges or drift pins have mushroomed heads, the heads might shatter on impact, sending sharp fragments flying toward the user or other employees

The employer is responsible for the safe condition of tools and equipment used by employees. Employers shall not issue or permit the use of unsafe hand tools. Employees should be trained in the proper use and handling of tools and equipment.

Employees, when using saw blades, knives, or other tools, should direct the tools away from aisle areas and away from other employees working in close proximity. Knives and scissors must be sharp; dull tools can cause more hazards than sharp ones. Cracked saw blades must be removed from service.

Wrenches must not be used when jaws are sprung to the point that slippage occurs. Impact tools such as drift pins, wedges, and chisels must be kept free of mushroomed heads. The wooden handles of tools must not be splintered.

Iron or steel hand tools may produce sparks that can be an ignition source around flammable substances. Where this hazard exists, spark-resistant tools made of non-ferrous materials should be used where flammable gases, highly volatile liquids, and other explosive substances are stored or used.

What Are the Dangers of Power Tools?

Appropriate personal protective equipment such as safety goggles and gloves must be worn to protect against hazards that may be encountered while using hand tools.

Workplace floors shall be kept as clean and dry as possible to prevent accidental slips with or around dangerous hand tools.

Power tools must be fitted with guards and safety switches; they are extremely hazardous when used improperly. The types of power tools are determined by their power source: electric, pneumatic, liquid fuel, hydraulic, and powder-actuated.

To prevent hazards associated with the use of power tools, workers should observe the following general precautions:

- Never carry a tool by the cord or hose
- Never yank the cord or the hose to disconnect it from the receptacle

- Keep cords and hoses away from heat, oil and sharp edges
- Disconnect tools when not using them, before servicing and cleaning them and when changing accessories such as blades, bits, and cutters
- Keep all people not involved with the work at a safe distance from the work area
- Secure work with clamps or a vise, freeing both hands to operate the tool
- Avoid accidental starting, do not hold fingers on the switch button while carrying a plugged-in tool
- Maintain tools with care; keep them sharp and clean for best performance.
- Follow instructions in the user's manual for lubricating and changing accessories
- Be sure to keep good footing and maintain good balance when operating power tools
- Wear proper apparel for the task, loose clothing, ties or jewelry can become caught in moving parts
- Remove all damaged portable electric tools from use and tag them: "Do Not Use"

Guards
The exposed moving parts of power tools need to be safeguarded. Belts, gears, shafts, pulleys, sprockets, spindles, drums, flywheels, chains or other reciprocating, rotating or moving parts of equipment must be guarded.

Machine guards, as appropriate, must be provided to protect the operator and others from the following:

- Point of operation
- In-running nip points
- Rotating parts
- Flying chips and sparks

Safety guards must never be removed when a tool is being used. Portable circular saws having a blade greater than 2 inches (5.08 centimeters) in diameter must be equipped at all times with guards. An upper guard must cover the entire blade of the saw. A retractable lower guard must cover the teeth of the saw, except where it makes contact with the work material. The lower guard must automatically return to the covering position when the tool is withdrawn from the work material.

Operating Controls and Switches
The following hand-held power tools must be equipped with a constant-pressure switch or control that shuts off the power when pressure is released: drills, tappers, fastener drivers, horizontal, vertical and angle grinders with wheels more than 2 inches (5.08 centimeters) in diameter; disc sanders with discs greater than 2 inches (5.08 centimeters); belt sanders; reciprocating saws; saber saws, scroll saws, and jigsaws with blade shanks greater than 1/4-inch (0.63 centimeters) wide; and other similar tools. These tools also may be equipped with a "lock-on" control, if it allows the worker to also shut off the control in a single motion using the same finger or fingers.

The following hand-held power tools must be equipped with either a positive "on-off" control switch, a constant pressure switch, or a "lock-on" control: disc sanders with discs 2 inches (5.08 centimeters) or less in diameter; grinders with wheels 2 inches (5.08 centimeters) or less in diameter; platen sanders, routers, planers, laminate trimmers, nibblers, shears, and scroll saws, and jigsaws, saber and scroll saws with blade shanks a nominal 1/4-inch (6.35 millimeters) or less in diameter. It is recommended that the constant-pressure control switch be regarded as the preferred device.

Other hand-held power tools such as circular saws having a blade diameter greater than 2 inches (5.08 centimeters), chain saws, and percussion tools with no means of holding accessories securely must be

equipped with a constant-pressure switch.

Electric Tools
Employees using electric tools must be aware of several dangers. Among the most serious hazards are electrical burns and shocks.

Electrical shocks, which can lead to injuries such as heart failure and burns, are among the major hazards associated with electric-powered tools. Under certain conditions, even a small amount of electric current can result in fibrillation of the heart and death. An electric shock also can cause the user to fall off a ladder or other elevated work surface and be injured due to the fall.

To protect the user from shock and burns, electric tools must have a three-wire cord with a ground and be plugged into a grounded receptacle, be double insulated or be powered by a low-voltage isolation transformer. Three-wire cords contain two current-carrying conductors and a grounding conductor. Any time an adapter is used to accommodate a two-hole receptacle, the adapter wire must be attached to a known ground. The third prong must never be removed from the plug.

Double-insulated tools are available that provide protection against electrical shock without third-wire grounding. On double-insulated tools, an internal layer of protective insulation completely isolates the external housing of the tool.

The following general practices should be followed when using electric tools:

- Operate electric tools within their design limitations
- Use gloves and appropriate safety footwear when using electric tools
- Store electric tools in a dry place when not in use
- Do not use electric tools in damp or wet locations unless they are approved for that purpose
- Keep work areas well lighted when operating electric tools
- Ensure that cords from electric tools do not present a tripping hazard

In the construction industry, employees who use electric tools must be protected by ground-fault circuit interrupters or an assured equipment-grounding conductor program.

Portable Abrasive Wheel Tools
Portable abrasive grinding, cutting, polishing and wire buffing wheels create special safety problems because they may throw off flying fragments. Abrasive wheel tools must be equipped with guards that: (1) cover the spindle end, nut and flange projections; (2) maintain proper alignment with the wheel; and (3) do not exceed the strength of the fastenings.

Before an abrasive wheel is mounted, it must be inspected closely for damage and should be sound- or ring-tested to ensure that it is free from cracks or defects. To test, wheels should be tapped gently with a light, non-metallic instrument. If the wheels sound cracked or dead, they must not be used because they could fly apart in operation. A stable and undamaged wheel, when tapped, will give a clear metallic tone or "ring."

To prevent an abrasive wheel from cracking, it must fit freely on the spindle. The spindle nut must be tightened enough to hold the wheel in place without distorting the flange. Always follow the manufacturer's recommendations. Take care to ensure that the spindle speed of the machine will not exceed the maximum operating speed marked on the wheel.

An abrasive wheel may disintegrate or explode during start-up. Allow the tool to come up to operating speed prior to grinding or cutting. The employee should never stand in the plane of rotation of the wheel as it

accelerates to full operating speed. Portable grinding tools need to be equipped with safety guards to protect workers not only from the moving wheel surface, but also from flying fragments in case of wheel breakage.

When using a powered grinder:

- Always use eye or face protection
- Turn off the power when not in use
- Never clamp a hand-held grinder in a vise

Pneumatic Tools

Pneumatic tools are powered by compressed air and include chippers, drills, hammers and sanders.

There are several dangers associated with the use of pneumatic tools. First is the danger of being hit by one of the tool's attachments or by some kind of fastener the worker is using with the tool.

Pneumatic tools must be checked to see that the tools are fastened securely to the air hose to prevent them from becoming disconnected. A short wire or positive locking device attaching the air hose to the tool must also be used and will serve as an added safeguard.

If an air hose is more than 1/2-inch (12.7 millimeters) in diameter, a safety excess flow valve must be installed at the source of the air supply to reduce pressure in case of hose failure.

In general, the same precautions should be taken with an air hose that are recommended for electric cords, because the hose is subject to the same kind of damage or accidental striking and because it presents tripping hazards.

When using pneumatic tools, a safety clip or retainer must be installed to prevent attachments such as chisels on a chipping hammer from being ejected during tool operation.

Pneumatic tools that shoot nails, rivets, staples or similar fasteners and operate at pressures more than 100 pounds per square inch (6,890 kPa), must be equipped with a special device to keep fasteners from being ejected, unless the muzzle is pressed against the work surface.

Airless spray guns that atomize paints and fluids at pressures of 1,000 pounds or more per square inch (6,890 kPa) must be equipped with automatic or visible manual safety devices that will prevent pulling the trigger until the safety device is manually released.

Eye protection is required and head and face protection is recommended for employees working with pneumatic tools.

Screens must also be set up to protect nearby workers from being struck by flying fragments around chippers, riveting guns, staplers, or air drills.

Compressed air guns should never be pointed toward anyone. Workers should never "dead-end" them against themselves or anyone else. A chip guard must be used when compressed air is used for cleaning.

Use of heavy jackhammers can cause fatigue and strains. Heavy rubber grips reduce these effects by providing a secure handhold. Workers operating a jackhammer must wear safety glasses and safety shoes that protect them against injury if the jackhammer slips or falls. A face shield also should be used.

Noise is another hazard associated with pneumatic tools. Working with noisy tools such as jackhammers requires proper, effective use of appropriate hearing protection.

Liquid Fuel Tools
Fuel-powered tools are usually operated with gasoline. The most serious hazard associated with the use of fuel-powered tools comes from fuel vapors that can burn or explode and give off dangerous exhaust fumes. The worker must be careful to handle, transport and store gas or fuel only in approved flammable liquid containers, according to proper procedures for flammable liquids.

Before refilling a fuel-powered tool tank, the user must shut down the engine and allow it to cool to prevent accidental ignition of hazardous vapors. When a fuel-powered tool is used inside a closed area, effective ventilation and/or proper respirators such as atmosphere-supplying respirators must be utilized to avoid breathing carbon monoxide. Fire extinguishers must also be available in the area.

Powder-Actuated Tools
Powder-actuated tools operate like a loaded gun and must be treated with extreme caution. In fact, they are so dangerous that they must be operated only by specially trained employees.

When using powder-actuated tools, an employee must wear suitable ear, eye, and face protection. The user must select a powder level -- high or low velocity -- that is appropriate for the powder-actuated tool and necessary to do the work without excessive force.

The muzzle end of the tool must have a protective shield or guard centered perpendicular to and concentric with the barrel to confine any fragments or particles that are projected when the tool is fired. A tool containing a high-velocity load must be designed not to fire unless it has this kind of safety device.

To prevent the tool from firing accidentally, two separate motions are required for firing. The first motion is to bring the tool into the firing position and the second motion is to pull the trigger. The tool must not be able to operate until it is pressed against the work surface with a force of at least 5 pounds (2.2 kg) greater than the total weight of the tool.

If a powder-actuated tool misfires, the user must hold the tool in the operating position for at least 30 seconds before trying to fire it again. If it still will not fire, the user must hold the tool in the operating position for another 30 seconds and then carefully remove the load in accordance with the manufacturer's instructions. This procedure will make the faulty cartridge less likely to explode. The bad cartridge should then be put in water immediately after removal. If the tool develops a defect during use, it should be tagged and must be taken out of service immediately until it is properly repaired.

Safety precautions that must be followed when using powder-actuated tools include the following:
- Do not use a tool in an explosive or flammable atmosphere
- Inspect the tool before using it to determine that it is clean, that all moving parts operate freely and that the barrel is free from obstructions and has the proper shield, guard, and attachments recommended by the manufacturer
- Do not load the tool unless it is to be used immediately
- Do not leave a loaded tool unattended, especially where it would be available to unauthorized persons
- Keep hands clear of the barrel end
- Never point the tool at anyone

When using powder-actuated tools to apply fasteners, several additional procedures must be followed:
- Do not fire fasteners into material that would allow the fasteners to pass through to the other side
- Do not drive fasteners into very hard or brittle material that might chip or splatter or make the fasteners ricochet
- Always use an alignment guide when shooting fasteners into existing holes

- When using a high-velocity tool, do not drive fasteners more than 3 inches (7.62 centimeters) from an unsupported edge or corner of material such as brick or concrete
- When using a high velocity tool, do not place fasteners in steel any closer than 1/2-inch (1.27 centimeters) from an unsupported corner edge unless a special guard, fixture, or jig is used

Hydraulic Power Tools
The fluid used in hydraulic power tools must be an approved fire-resistant fluid and must retain its operating characteristics at the most extreme temperatures to which it will be exposed. The exception to fire-resistant fluid involves all hydraulic fluids used for the insulated sections of derrick trucks, aerial lifts and hydraulic tools that are used on or around energized lines. This hydraulic fluid shall be of the insulating type.

The manufacturer's recommended safe operating pressure for hoses, valves, pipes, filters and other fittings must not be exceeded.

All jacks including lever and ratchet jacks, screw jacks, and hydraulic jacks -- must have a stop indicator, and the stop limit must not be exceeded. In addition, the manufacturer's load limit must be permanently marked in a prominent place on the jack, and the load limit must not be exceeded.

A jack should never be used to support a lifted load. Once the load has been lifted, it must immediately be blocked up. Put a block under the base of the jack when the foundation is not firm, and place a block between the jack caps and load if the cap might slip.

To set up a jack, make certain of the following:
- The base of the jack rests on a firm, level surface
- The jack is correctly centered
- The jack head bears against a level surface
- The lift force is applied evenly

Proper maintenance of jacks is essential for safety. All jacks must be lubricated regularly. In addition, each jack must be inspected according to the following schedule: (1) for jacks used continuously or intermittently at one site -- inspected at least once every 6 months, (2) for jacks sent out of the shop for special work inspected when sent out and inspected when returned, and (3) for jacks subjected to abnormal loads or shock inspected before use and immediately thereafter.

Hazard Communication

The Hazard Communication Standard (HCS) is now aligned with the Globally Harmonized System of Classification and Labeling of Chemicals (GHS). This update to the Hazard Communication Standard (HCS) will provide a common and coherent approach to classifying chemicals and communicating hazard information on labels and safety data sheets. This update will also help reduce trade barriers and result in productivity improvements for American businesses that regularly handle, store and use hazardous chemicals while providing cost savings for American businesses that periodically update safety data sheets and labels for chemicals covered under the hazard communication standard.

Hazard Communication Standard

In order to ensure chemical safety in the workplace, information about the identities and hazards of the chemicals must be available and understandable to workers. OSHA's Hazard Communication Standard (HCS) requires the development and dissemination of such information:

- Chemical manufacturers and importers are required to evaluate the hazards of the chemicals they produce or import and prepare labels and safety data sheets to convey the hazard information to their downstream customers.
- All employers with hazardous chemicals in their workplaces must have labels and safety data sheets for their exposed workers and train them to handle the chemicals appropriately.

Major changes to the Hazard Communication Standard

- **Hazard classification**: Provides specific criteria for classification of health and physical hazards, as well as classification of mixtures.
- **Labels**: Chemical manufacturers and importers will be required to provide a label that includes a harmonized signal word, pictogram and hazard statement for each hazard class and category. Precautionary statements must also be provided.
- **Safety Data Sheets**: Will now have a specified 16-section format.
- **Information and training**: Employers are required to train workers by December 1, 2013 on the new labels elements and safety data sheets format to facilitate recognition and understanding.

Safety Data Sheets

Employees will have access to Safety Data Sheets at all locations that use hazardous chemicals.

- Maintenance Shop
- All Water Treatment Plants and Wastewater Treatment Plant

The Hazard Communication Standard (HCS) requires chemical manufacturers, distributors, or importers to provide Safety Data Sheets (SDS's) (formerly known as Material Safety Data Sheets or MSDS's) to communicate the hazards of hazardous chemical products. As of June 1, 2015, the HCS will require new SDS's to be in a uniform format, and include the section numbers, the headings and associated information under the headings below:

Section 1, Identification includes product identifier; manufacturer or distributor name, address, phone number; emergency phone number; recommended use; restrictions on use.

Section 2, Hazard(s) identification includes all hazards regarding the chemical; required label elements.

Section 3, Composition/information on ingredients includes information on chemical ingredients; trade secret claims.

Section 4, First-aid measures includes important symptoms/effects, acute, delayed; required treatment.

Section 5, Fire-fighting measures lists suitable extinguishing techniques, equipment; chemical hazards from fire.

Section 6, Accidental release measures lists emergency procedures; protective equipment; proper methods of containment and cleanup.

Section 7, Handling and storage lists precautions for safe handling and storage, including incompatibilities.

Section 8, Exposure controls/personal protection lists OSHA's Permissible Exposure Limits (PELs); ACGIH Threshold Limit Values (TLVs); and any other exposure limit used or recommended by the chemical manufacturer, importer, or employer preparing the SDS where available as well as appropriate engineering controls; personal protective equipment (PPE).

Section 9, Physical and chemical properties lists the chemical's characteristics.

Section 10, Stability and reactivity lists chemical stability and possibility of hazardous reactions.

Section 11, Toxicological information includes routes of exposure; related symptoms, acute and chronic effects; numerical measures of toxicity.

Section 12, Ecological information*
Section 13, Disposal considerations*
Section 14, Transport information*
Section 15, Regulatory information*

Section 16, Other information, includes the date of preparation or last revision.

Hazard Communication Standard Labels

OSHA has updated the requirements for labeling of hazardous chemicals under its Hazard Communication Standard (HCS). All labels are required to have pictograms, a signal word, hazard and precautionary statements, the product identifier, and supplier identification. A sample revised HCS label, identifying the required label elements, is shown on the right. Supplemental information can also be provided on the label as needed.

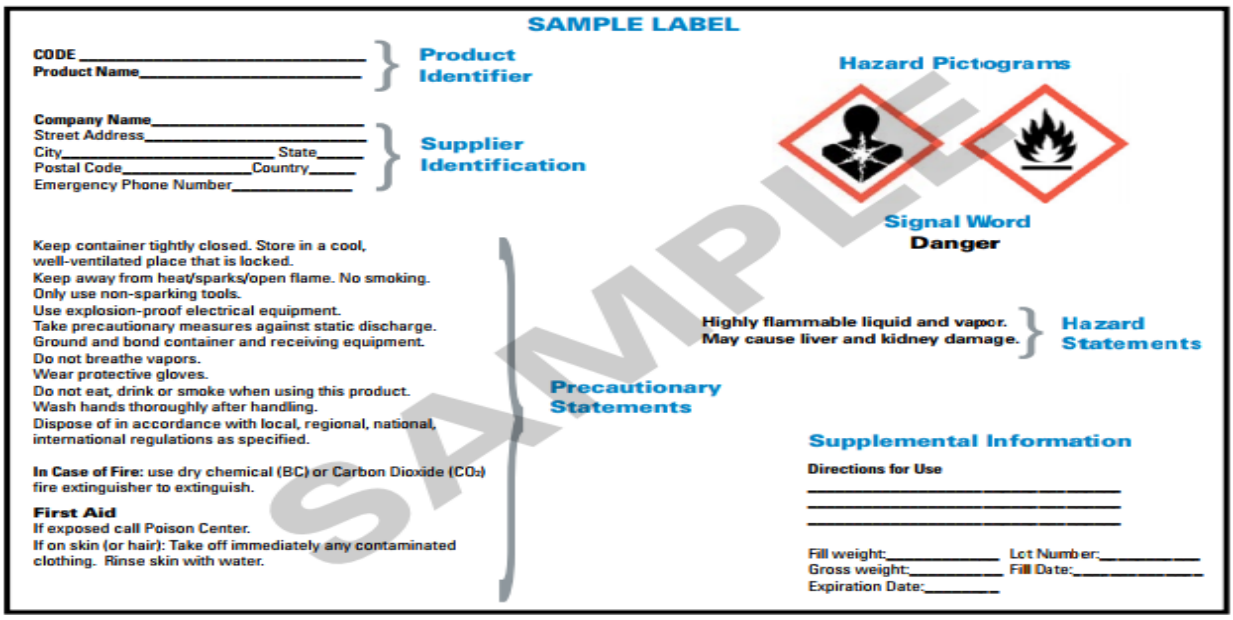

Hazard Communication Standard Pictograms

As of June 1, 2015, the Hazard Communication Standard (HCS) will require pictograms on labels to alert users of the chemical hazards to which they may be exposed. Each pictogram consists of a symbol on a white background framed within a red border and represents a distinct hazard(s). The pictogram on the label is determined by the chemical hazard classification.

Health Hazard

- Carcinogen
- Mutagenicity
- Reproductive Toxicity
- Respiratory Sensitizer
- Target Organ Toxicity
- Aspiration Toxicity

Flame

- Flammables
- Pyrophorics
- Self-Heating
- Emits Flammable Gas
- Self-Reactives
- Organic Peroxides

Exclamation Mark

- Irritant (skin and eye)
- Skin Sensitizer
- Acute Toxicity (harmful)
- Narcotic Effects
- Respiratory Tract Irritant
- Hazardous to Ozone Layer (Non-Mandatory

Gas Cylinder

- Gases Under Pressure

Corrosion

- Skin Corrosion/Burns
- Eye Damage
- Corrosive to Metals

Exploding Bomb

- Explosives
- Self-Reactives
- Organic Peroxides

Flame Over Circle

- Oxidizers

Environment (Non-Mandatory)

- Aquatic Toxicity

Skull and Crossbones

- Acute Toxicity (fatal or toxic)

Ladder Safety

Falls from portable ladders (step, straight, combination and extension) are one of the leading causes of occupational fatalities and injuries.

- Read and follow all labels/markings on the ladder.
- Avoid electrical hazards – Look for overhead power lines before handling a ladder. Avoid using a metal ladder near power lines or exposed energized electrical equipment.
- Always inspect the ladder prior to using it. If the ladder is damaged, it must be removed from service and tagged until repaired or discarded.
- Always maintain a 3-point (two hands and a foot or two feet and a hand) contact on the ladder when climbing. Keep your body near the middle of the step and always face the ladder while climbing (see diagram).

- Only use ladders and appropriate accessories (ladder levelers, jacks or hooks) for their designed purposes.
- Ladders must be free of any slippery material on the rungs, steps or feet.
- Do not use a self-supporting ladder (e.g., stepladder) as a single ladder or in a partially closed position.
- Do not use the top step/rung of a ladder as a step/rung unless it was designed for that purpose.
- Use a ladder only on a stable and level surface, unless it has been secured (top or bottom) to prevent displacement.
- Do not place a ladder on boxes, barrels or other unstable bases to obtain additional height.
- Do not move or shift a ladder while a person or equipment is on the ladder.
- An extension or straight ladder used to access an elevated surface must extend at least 3 feet above the point of support (see diagram). Do not stand on the three top rungs of a straight, single or extension ladder.
- The proper angle for setting up a ladder is to place its base a quarter of the working length of the ladder from the wall or other vertical surface (see diagram).
- A ladder placed in any location where it can be displaced by other work activities must be secured to prevent displacement or a barricade must be erected to keep traffic away from the ladder.
- Be sure that all locks on an extension ladder are properly engaged.
- Do not exceed the maximum load rating of a ladder. Be aware of the ladder's load rating and of the weight it is supporting, including the weight of any tools or equipment.

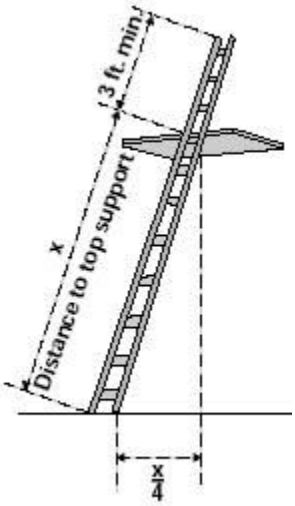

Lock Out / Tag Out

The objective of this procedure is to establish a means of positive control to prevent the accidental starting or activating of machinery or systems while they are being repaired, cleaned and/or serviced. This program serves to:

- Establish a safe and positive means of shutting down machinery, equipment and systems.
- Prohibit unauthorized personnel or remote control systems from starting machinery or equipment while it is being serviced.
- Provide a secondary control system (tag out) when it is impossible to positively lockout the machinery or equipment.
- Establish responsibility for implementing and controlling lockout/tag out procedures.
- Ensure that only approved locks, standardized tags and fastening devices provided by the company will be utilized in the lockout/tag out procedures.

ASSIGNMENT OF RESPONSIBILITY

A. Responsible Person will be responsible for implementing the lockout/tag out program.
B. Responsible Persons are responsible for enforcing the program and insuring compliance with the procedures in their departments.
C. Responsible Person is responsible for monitoring the compliance of this procedure and will conduct the annual inspection and certification of the authorized employees.
D. Authorized employees are responsible for following established lockout/tag out procedures.
E. Affected employees (all other employees in the facility) are responsible for insuring they do not attempt to restart or re-energize machines or equipment, which are locked out or tagged out.

PROCEDURES

The ensuing items are to be followed to ensure both compliance with the OSHA Control of Hazardous Energy Standard and the safety of our employees.

A. **Preparation for Lockout or Tag out**

Employees who are required to utilize the lockout/tag out procedure must be knowledgeable of the different energy sources and the proper sequence of shutting off or disconnecting energy means. The four types of energy sources are:

1. Electrical (most common form)
2. Hydraulic or pneumatic
3. Fluids and gases
4. Mechanical (including gravity)

More than one energy source may be utilized on some equipment and the proper procedure must be followed in order to identify energy sources and lockout/tag out accordingly.

B. Electrical

1. Shut off power at machine and disconnect.
2. Disconnecting means must be locked or tagged.
3. Press start button to see that correct systems are locked out.
4. All controls must be returned to their safest position.
5. Points to remember:

a. If a machine or piece of equipment contains capacitors, they must be drained of stored energy.
b. Possible disconnecting means include the power cord, power panels (look for primary and secondary voltage), breakers, the operator's station, motor circuit, relays, limit switches and electrical interlocks.
c. Some equipment may have a motor isolating shut-off and a control isolating shut-off.
d. If the electrical energy is disconnected by simply unplugging the power cord, the cord must be kept under the control of the authorized employee or the plug end of the cord must be locked out or tagged out.

C. Hydraulic/Pneumatic

1. Shut off all energy sources (pumps and compressors). If the pumps and compressors supply energy to more than one piece of equipment, lockout or tag out the valve supplying energy to the piece of equipment being serviced.
2. Stored pressure from hydraulic/pneumatic lines shall be drained/bled when release of stored energy could cause injury to employees.
3. Make sure controls are returned to their safest position (off, stop, standby, inch, jog, etc.).

D. **Fluids and Gases**

1. Identify the type of fluid or gas and the necessary personal protective equipment.
2. Close valves to prevent flow and lockout/tag out.
3. Determine the isolating device, then close and lockout/tag out.
4. Drain and bleed lines to zero energy state.
5. Some systems may have electrically controlled valves. If so, they must be shut off and locked/tagged out.
6. Check for zero energy state at the equipment.

E. Mechanical Energy

Mechanical energy includes gravity activation, energy stored in springs, etc.

1. Block out or use die ram safety chain.
2. Lockout or tag out safety device.
3. Shut off, lockout or tag out electrical system.
4. Check for zero energy state.
5. Return controls to safest position.

F. Release from Lockout/Tag out

1. **Inspection:** Make certain the work is completed and inventory the tools and equipment that were used.
2. **Clean-up:** Remove all towels, rags, work-aids, etc.
3. **Replace guards:** Replace all guards possible. Sometimes a particular guard may have to be left off until the start sequence is over due to possible adjustments. However, all other guards should be put back into place.
4. **Check controls:** All controls should be in their safest position.
5. The work area shall be checked to ensure that all employees have been safely positioned or removed and notified that the lockout/tag out devices are being removed.
6. Remove locks/tags. Remove only your lock or tag.

G. **Service or Maintenance Involving More than One Person**

When servicing and/or maintenance is performed by more than one person, each authorized employee shall place his own lock or tag on the energy isolating source. This shall be done by utilizing a multiple lock scissors clamp if the equipment is capable of being locked out. If the equipment cannot be locked out, then each authorized employee must place his tag on the equipment.

H. **Removal of an Authorized Employee's Lockout/Tag out by the Town**

Each location must develop written emergency procedures to be utilized at that location. Emergency procedures for removing lockout/tag out should include the following:

1. Verification by employer that the authorized employee who applied the device is not in the facility.
2. Make reasonable efforts to advise the employee that his/her device has been removed. (This can be done when he/she returns to the facility).
3. Ensure that the authorized employee has this knowledge before he/she resumes work at the facility.

I. **Shift or Personnel Changes**

Each facility must develop written procedures based on specific needs and capabilities. Each procedure must specify how the continuity of lockout or tag out protection will be ensured at all times.

J. **Training and Communication**

Each authorized employee who will be utilizing the lockout/tag out procedure will be trained in the recognition of applicable hazardous energy sources, type and magnitude of energy available in the work place, and the methods and means necessary for energy isolation and control.

Each affected employee (all employees other than authorized employees utilizing the lockout/tag out procedure) shall be instructed in the purpose and use of the lockout/tag out procedure and the prohibition of attempts to restart or re-energize machines or equipment that are locked out or tagged out.

K. **Periodic Inspection**

The inspection will include a review between the inspector and each authorized employee of that employee's responsibilities under the energy control (lockout/tag out) procedure. The inspection will also consist of a physical inspection of the authorized employee while performing work under the procedures.

Slip, Trip and Falls

The Danger of Slips, Trips and Falls

Falls are the third leading cause of unintentional death in the U.S., accounting for nearly 32,000 deaths in 2014. The risk of falling rises with age.

In homes and communities, more than 31,000 people died in a fall in 2014. In the workplace, nearly 600 people died and 47,000 were injured in 2013. Fall prevention training for the workplace can help prevent injuries and deaths.

Fall Prevention Tips

- Clean up all spills immediately
- Stay off freshly mopped floors
- Secure electrical and phone cords out of traffic areas
- Remove small throw rugs or use non-skid mats to keep them from slipping
- Keep frequently used items in easily reachable areas
- Wear shoes with good support and slip resistant soles
- Arrange furniture to provide open walking pathways
- Keep drawers and cabinet doors closed at all times
- Install handrails on all staircases on both sides
- Remove tripping hazards (paper, boxes, books, clothes, toys, shoes) from stairs and walkway
- If you have young children, install gates at the top and bottom of stairs (unlatch the gate in order to pass – do not climb over them)
- Ensure adequate lighting both indoors and outdoors
- Remove debris from exterior walkways
- Adjust gutter downspouts to drive water away from pathways
- Periodically check the condition of walkways and steps, and repair damages immediately
- Never stand on a chair, table or other surface on wheels

Stress Management

What is critical incident stress?

Workers responding to emergency events and or disasters will see and experience events that will strain their ability to function. These events, which include having to witness or experience tragedy, death, serious injuries and threatening situations, are called "Critical Incidents." The physical and psychological well-being of those experiencing this stress, as well as their future ability to function through a prolonged response, will depend upon how they manage this stress. Post-Traumatic Stress Disorder differs from critical incident stress by lasting longer than four weeks after the event triggering the emotional, mental or physical response. Most instances of critical incident stress last between two days and four weeks.

What are some signs of critical incident stress?

The signs and symptoms of critical incident stress can be physical, emotional, cognitive or behavioral. Individuals express stress in different ways and therefore manifest different reactions. The list below is not exhaustive but will help supervisors to identify workers who are exhibiting stress reactions.

PHYSICAL	COGNITIVE	EMOTIONAL	BEHAVIORAL
Fatigue Chills Unusual thirst Chest pain Headaches Dizziness	Uncertainty Confusion Nightmares Poor attention, decision making ability Poor concentration, memory Poor problem solving ability	Grief Fear Guilt Intense anger Apprehension and depression Irritability Chronic anxiety	Inability to rest Withdrawal Antisocial behavior Increased alcohol consumption Change in communications Loss/increase in appetite

What can be done immediately?

During the emergency phase of the response, monitoring of employees by simple conversation and observation may help to identify early signs for some responders. The following steps can help to reduce significant stress detected early in the response:

- Limit exposure to noise and odors
- Dictate an immediate 15-minute rest break
- Provide non-caffeinated fluids to drink
- Provide low sugar and low fat food
- Get the person to talk about his or her feelings
- Do not rush the person back to work

Welding

- **ALWAYS** wear a proper face shield.
- **ALWAYS** wear close-toed shoes.
- **ALWAYS** wear a long-sleeved, non-flammable shirt.
- **ALWAYS** wear proper welding gloves.
- **ALWAYS** wear ear protection (earplugs or muffs) to prevent sparks from entering your ear canal. An eardrum punctured by a spark will instantly cauterize and never heal.
- **NEVER** weld on or near anything that has been cleaned with a chlorinated hydrocarbon like brake-cleaner. When combined with UV light, chlorinated hydrocarbons can create phosgene gas, which can cause serious injury or death. Ventilation will not prevent poisoning.
- If you burn yourself, immediately douse with cold water, seconds count.

Fire

Make sure the weld area is free from all flammable materials such as flammable liquids, paper, etc. **Do not** wear clothing or gloves that have been exposed to flammable liquids.

Electrocution

Before turning on a welding machine, make sure there are no puddles of water on the floor around the weld bench or the machine. Make sure the weld machine is dry, including the main box, the torch, the pedal and the plug.

There is little risk of fatal electrocution from a properly working TIG weld machine. When the user presses on the pedal to initiate the arc, a high-frequency low amplitude arc will emit from the tip of the weld torch. Once the machine detects the grounded metal piece that is to be welded, the arc will switch over to a high-amplitude DC current. Even if the operator deliberately points it toward their body, the shock will be mild, since the machine will not switch over to the high amplitude current.

Burns

Welded metal will remain hot for several minutes after it is welded. In most cases the heat is localized near the weld itself. In the case of more conductive materials, such as copper and aluminum, the heat may be more distributed throughout the material.

In the case of TIG welding, sparks and spatter are non-existent, unless rusty or dirty metal is used. MIG welding steel will create sparks, so earplugs and full coverage safety glasses should be worn to prevent burns to sensitive tissue.

Gloves **must** be worn when welding and handling recently welded material. White cotton welding gloves may be used for light TIG welding, as long as they are free of holes. For heavier welding, deerskin or heavy duty welding gloves should be used.

UV Burns

The light emitted from a weld arc is brighter than that of the sun. **Do not look at the arc without wearing a full-faced welding mask with a shade 10 or darker filter plate.** Always make sure the weld curtains are in place between the welder(s) and other people in the shop. Be sure to cover any exposed skin, including cuff and collar areas, while welding or observing inside the weld area. The rays from the arc can cause a UV burn much worse than a sunburn. Observers may use a cardboard mask with a shade 10 filter plate.

Compressed Gas Cylinders

Argon and CO2 are inert, nontoxic gases normally present in the atmosphere. However, if allowed to fill an enclosed area these gases can fully displace breathable air, causing asphyxiation and death. At the Asylum, the greater potential danger is the valve being knocked off the cylinder, turning it into a rocket powerful enough to severely injury or kill people and damage equipment and the building itself.

Storing

- Cylinders must **ALWAYS** remain upright and NEVER be placed horizontally.
- Cylinders must be secured with a non-combustible material (metal) to an immovable object to prevent them from falling.

Town of Boonsboro
21 North Main Street
Boonsboro, Maryland, 21713
(301) 432-5141 F (301)4324050
www.town.boonsboro.md.us

TRAINING SUMMARY

Please sign and return to Town Safety Coordinator

All Public works and Water/Wastewater Staff will review the employee handbook annually.

Employees will be recertified annually on Confined Space, Fall Protection, Blood Borne Pathogens and Respirator Use/Fit Test

Safety Topic	Employee Initials
Confined Space	
Respirator Usage and Fit Test	
Back Injury Prevention	
Blood Borne Pathogens	
Compressed Gas Cylinders	
Driver Safety	
Electrical Safety	
Excavation and Trenching	
Fall Protection	
Fire Extinguisher Use	
Hand & Power Tools	
Hazard Communication	
Ladder Safety	
Lock Out / Tag Out	
Slip, Trip and Falls	
Stress Management	
Welding	
Personal Protective Equipment	

I have read and understand the information contained in the Town of Boonsboro Employee Safety Manual.

Employee Name	Employee Signature	Date

Town of Boonsboro
21 North Main Street
Boonsboro, Maryland, 21713
(301) 432-5141 F (301)4324050
www.town.boonsboro.md.us

INCIDENT REPORT

DATE OF INCIDENT:

DETAILS:

I understand this report as described to me.

_____ _____

Name **Date**

INCIDENT REPORT FILED BY: _____

ACTION TAKEN: _____

INSURANCE CLAIM FILED YES or NO

SIGNATURE OF SUPERVISOR _____

"In accordance with Federal law and U.S. Department of Agriculture policy, this institution is prohibited from discrimination on the basis of race, color, national origin, sex, age, familial status, religion, or disability. To file a complaint of discrimination you may file in person with, or write to USDA,Director, Office of Civil Rights, 1400 Independence Avenue, SW., Washington, DC 20250-9410 or call (800)795-3272 (voice) or (202)720-6382 (TDD)"

Town of Boonsboro
21 North Main Street
Boonsboro, Maryland, 21713
(301) 432-5141 F (301)4324050
www.town.boonsboro.md.us

CONFINED SPACE ENTRY PERMIT

Confined Space Location / Description	Date:

Purpose of Entry

Time In:		**Permit Canceled Time:**	
Time Out:		**Reason Permit Canceled:**	

Rescue of Emergency Services Required –

Hazards of Confined Space	Yes	No	Special Requirements	Yes	No
Oxygen Deficiency			Hot Work Permit Required		
Combustible Gas			Lockout / Tag out		
Combustible Dust			Lines Broken, Capped or Blanked		
Carbon Monoxide			Purge-Flush and Vent		
Hydrogen Sulfide			Secure Area – Post and Flag		
Toxic Gas / Vapor			Ventilation		
Toxic Fumes			Other - List		
Chemical Hazard			**Special Equipment**		
Electrical Hazard			SCBA or Respirator		
Mechanical Hazard			Harness Required		
Engulfment Hazard			Tripod Emergency Escape Unit		
Entrapment Hazard			Lifelines		
Thermal Hazard			Lighting		
Slip or Fall Hazard			PPE – Goggles. Gloves, Clothing, Etc.		
			Fire Extinguisher		

Communication Procedures:	

DO NOT ENTER IF PERMISSIBLE ENTRY OF LEVELS ARE EXCEEDED		MONITOR ATMOSPHERE AND LOG EVERY 30 MINUTES (if not ok, leave confined space immediately			
Permissible Entry Level		Time	OK (Y or N)	Time	OK (Y or No)
% of Oxygen	19.5% to 23.5%	Before Entry			
% of LEL	Less than 10%				
Carbon Monoxide	35 PPM (8 hr.)				
Hydrogen Sulfide	10 PPM (8 hr.)				

Town of Boonsboro
21 North Main Street
Boonsboro, Maryland, 21713
(301) 432-5141 F (301)4324050
www.town.boonsboro.md.us

CONFINED SPACE ENTRY PERMIT

Name of Employee(s) Testing Atmosphere:	

Test Instrument used (Model, Serial Number and Date of Last Calibration

Authorized Entrants:	**Authorized Attendants:**

Permit Authorization **I certify that all actions and conditions necessary for safe entry have been preformed**
Name – Print:
Signature:
Date:

Town of Boonsboro
21 North Main Street
Boonsboro, Maryland, 21713
(301) 432-5141 F (301)4324050
www.town.boonsboro.md.us

LOCKOUT / TAG OUT AUTHORIZATION

Equipment Description / Location:	Lock and Tag Number:

Name of Responsible Person Locking Out Equipment:	Date:

Reason for Locking and Tagging Out Equipment:

What Hazards Exist (electrical, pneumatic, mechanical, etc.)?

Is the Equipment De-Energized? Explain:

Procedure Used to Verify De-Energization:

Supervisor	Responsible Person
The equipment was inspected and approved to be put into service	**Acknowledging the lock was removed**
Name -	Name -
Signature -	Signature -
Date -	Date -

Town of Boonsboro
21 North Main Street
Boonsboro, Maryland, 21713
(301) 432-5141 F (301)4324050
www.town.boonsboro.md.us

TRAINING SIGN-IN

Topic:	**Date:**

Instructors Printed Name:	**Signature:**

Students Printed Name:	**Signature:**